BRENAIR FARMS INC.
LAYER BARN
MELBOURNE, ON

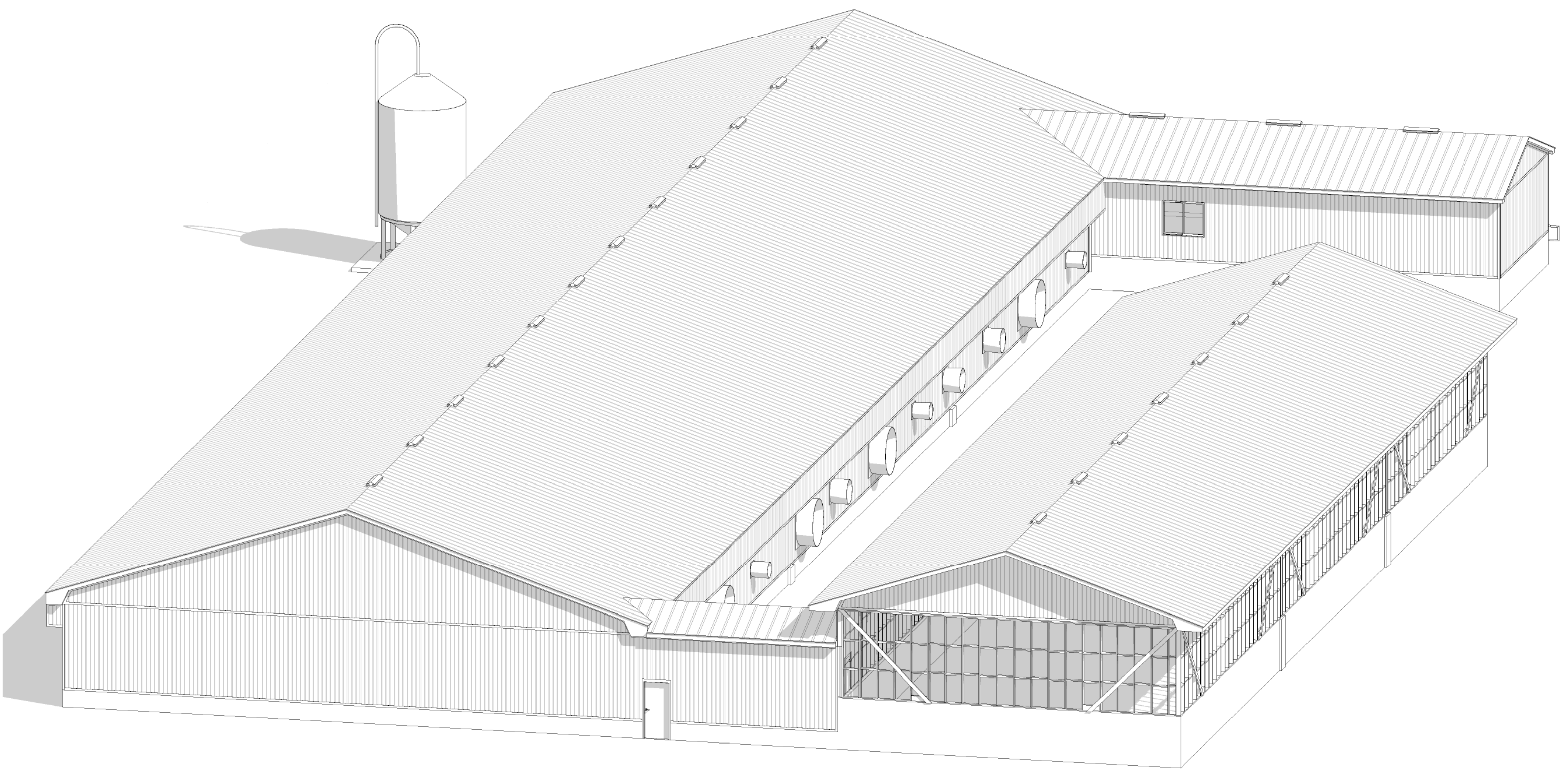

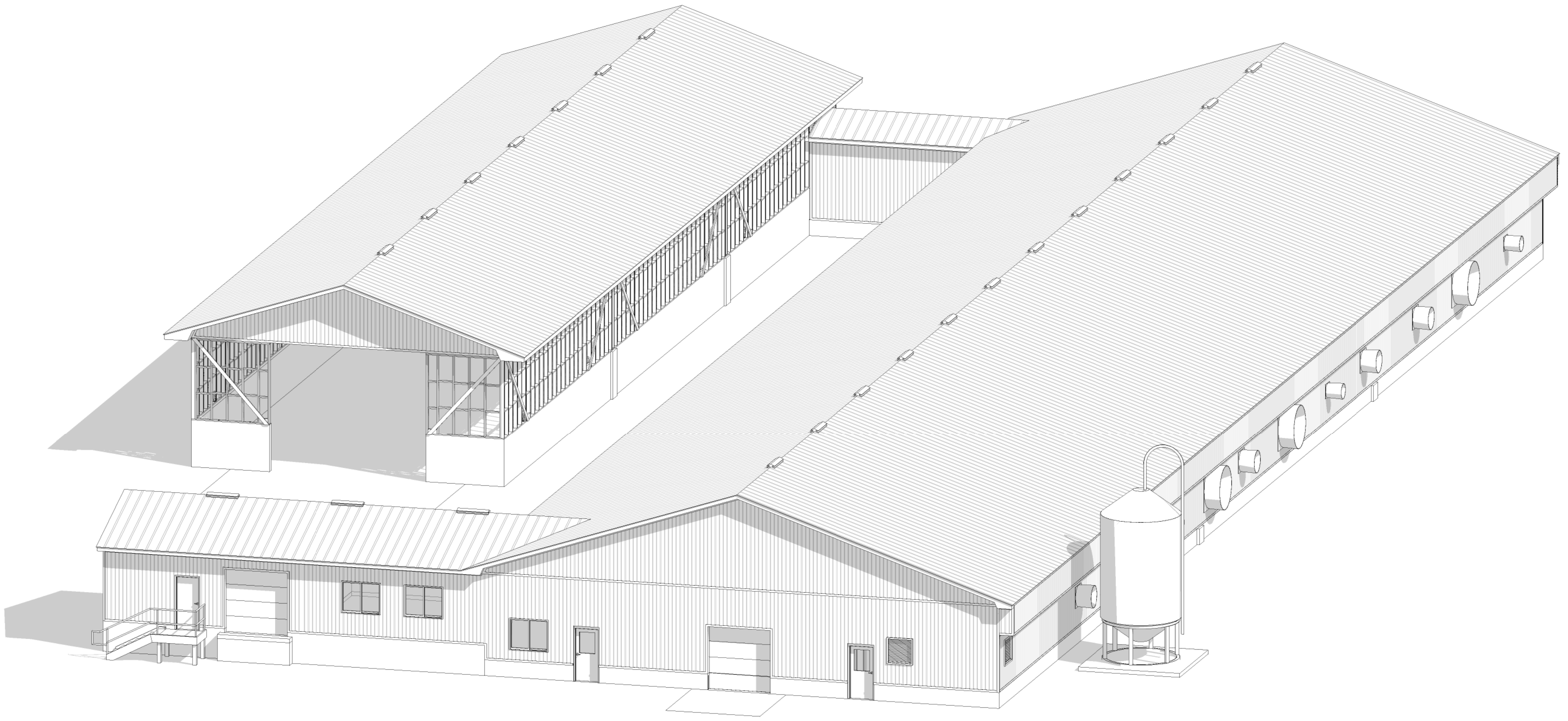

DRAWINGS

S-0	TITLE SHEET
S-1	ELEVATIONS
S-2	FOUNDATION PLAN - SECTIONS & DETAILS
S-3	GROUND FLOOR PLAN - SECTIONS & DETAILS
S-4	ROOF FRAMING PLAN - SECTIONS & DETAILS
S-5	SECTIONS & DETAILS
S-6	SECTIONS & DETAILS
S-7	SECTIONS & DETAILS
S-8	GENERAL NOTES - OBC MATRIX
SP	SITE LOCATION PLAN - MDS SKETCH

NORTH

NOTES:

c/w	COMPLETE WITH
FDN	FOUNDATION
e/w	EACH WAY
EX.	EXISTING
H	HIGH/HORIZONTAL
max.	MAXIMUM
min.	MINIMUM
OBC	ONTARIO BUILDING CODE
o/c	ON CENTER
P.T.	PRESSURE TREATED
r/w	REINFORCED WITH
t/o	TOP OF
TYP.	TYPICAL
V	VERTICAL
W	WIDE
WWW	WELDED WIRE MESH

No.	REVISION DESCRIPTION	MM/DD/YY	CH'KD
1.	PRELIMINARY FOR DISCUSSION ONLY	05/07/25	TR
2.	REVISED FOR OWNER REVIEW	06/20/25	TR
3.	SITE PLAN - MINOR VARIANCE APPLICATION	07/10/25	TR
4.	ISSUED FOR APPROVAL	07/21/25	TR
5.	REVISED SITE PLAN	08/22/25	TR

CONTRACTOR

08/22/25
T. J. REGIER
100550036

CONSULTANT

MR ENGINEERING AND DESIGN LTD.
CIVIL • COMMERCIAL • AGRICULTURAL

145 Thames Road, West, Unit 4
Exeter, ON, N0M 1S3
Telephone: (519)-317-0128
Email: admin@mrengdesign.com

BRENAIR FARMS INC.
LAYER BARN

7189 PARKHOUSE DRIVE
MELBOURNE, ON
N0L 1T0

TITLE SHEET

PROJECT No. *MR25-027*

SHEET No. S-0

SCALE

DESIGN	**TR**
DRAWN	**TR**
CHECKED	**TR**
APPROVED	**TR**
DATE	**AUGUST 2025**

NOTES:

1 ALL ROOF SLOPES TO BE 4/12 UNLESS NOTED OTHERWISE.

2. EXTERIOR CLADDING SHOWN IS REPRESENTATIONAL ONLY. ACTUAL EXTERIOR CLADDING MAY DIFFER THAN WHAT IS SHOWN.

3. ALL BARN WALLS TO BEAR ONTO 24" WIDE x 8" THICK CONCRETE STRIP FOOTING REINFORCED WITH 2-15M CONTINUOUS. PROVIDE 30"V x 6"H 15M DOWELS @ 24" o/c (F1) UNLESS NOTED OTHERWISE. REFER TO SECTIONS FOR DETAILS.

4. CONTRACTOR TO CONFIRM ROUGH OPENINGS PRIOR TO CONSTRUCTION.

5. ALL EXTERIOR DOORS TO BE INSULATED.

6. ALL OVERHEAD DOORS TO BE INSULATED TO THE SATISFACTION OF THE OWNER.

DOOR SCHEDULE

TAG	DESCRIPTION	ROUGH OPENING	HEAD HEIGHT	LINTELS	BEARING	COMMENTS
D-1	36"W x 80"H STEEL DOOR FACTORY PAINTED c/w WINDOW	38 1/2"W x 82 1/2"H	82 1/2"	2-PLY 2x6 SPF No.1/No.2	1 JACK STUD / 1 KING STUD	
D-2	34"W x 80"H STEEL DOOR FACTORY PAINTED	36 1/2"W x 82 1/2"H	82 1/2"	4-PLY 2x8 SPF No.1/No.2	2 JACK STUDS / 1 KING STUD	
D-3	36"W x 80"H STEEL DOOR FACTORY PAINTED	38 1/2"W x 82 1/2"H	82 1/2"	4-PLY 2x8 SPF No.1/No.2	2 JACK STUDS / 1 KING STUD	
D-4	36"W x 80"H STEEL DOOR FACTORY PAINTED	38 1/2"W x 82 1/2"H	82 1/2"	2-PLY 2x6 SPF No.1/No.2	1 JACK STUD / 1 KING STUD	
D-5	36"W x 80"H STEEL DOOR FACTORY PAINTED c/w WINDOW	38 1/2"W x 82 1/2"H	82 1/2"	2-PLY 2x6 SPF No.1/No.2	1 JACK STUD / 1 KING STUD	
D-6	36" W x 80"H STEEL DOOR FACTORY PAINTED	38 1/2"W x 82 1/2"H	82 1/2"	2-PLY 2x8 SPF No.1/No.2	1 JACK STUD / 1 KING STUD	
D-7	36"W x 48"H EXTERIOR NON-ROT DOOR	38 1/2"W x 50 1/2"H	50 1/2"	3-PLY 2x8 SPF No.1/No.2	2 JACK STUDS / 1 KING STUD	VIEWING DOOR - NOT FOR EXIT
D-8	36" W x 80"H INTERIOR NON-ROT DOOR	38 1/2"W x 82 1/2"H	82 1/2"	2-PLY 2x4 SPF No.1/No.2	1 JACK STUD / 1 KING STUD	
D-9	36" W x 80"H 45 min F.R.R METAL DOOR	38 1/2"W x 82 1/2"H	82 1/2"	2-PLY 2x4 SPF No.1/No.2	1 JACK STUD / 1 KING STUD	c/w SELF CLOSING DEVICE

WINDOW SCHEDULE

TAG	DESCRIPTION	ROUGH OPENING	HEIGHT A.F.F.	LINTEL	BEARING	COMMENTS
WN-1	60"W x 48"H SLIDER WINDOW	61"W x 49"H	91"	2-PLY 2x8 SPF No.1/No.2	1 JACK STUD / 1 KING STUD	
WN-2	60"W x 48"H SLIDER WINDOW	61"W x 49"H	91"	2-PLY 2x6 SPF No.1/No.2	1 JACK STUD / 1 KING STUD	
WN-3	60"W x 48"H FIIXED WINDOW	61"W x 49"H	91"	3-PLY 2x10 SFP No.1/No.2	2 JACK STUDS / 1 KING STUD	

OVERHEAD DOOR SCHEDULE

TAG	DESCRIPTION	ROUGH OPENING	HEAD HEIGHT	LINTELS	BEARING	COMMENTS
OHD-1	8'-0"W x 8'-0"H OVERHEAD DOOR - WITHOUT WINDOWS	8' - 0"W x 8' - 0"H	8' - 0"	3-PLY 2x10 SPF No.1/No.2	2 JACK STUDS / 1 KING STUD	
OHD-2	8'-0"W x 8'-0"H OVERHEAD DOOR - WITHOUT WINDOWS	8' - 0"W x 8' - 0"H	8' - 0"	3-PLY 2x8 SPF No.1/No.2	2 JACK STUDS / 1 KING STUD	
OHD-3	6'-0"W x 8'-0"H OVERHEAD DOOR	6' - 0"W x 8' - 0"H	8' - 0"	2-PLY 2x8 SPF No.1/No.2	1 JACK STUD / 1 KING STUD	

EXHAUST FAN SCHEDULE

TAG	DESCRIPTION	ROUGH OPENING	HEAD HEIGHT	LINTEL	BEARING	COMMENTS
EF-1	54"Ø EXHAUST FAN - REFER TO 2/S-3	64"W x 64"H	80"	4-PLY 2x10 SPF No.1/No.2	2 JACK STUDS / 1 KING STUD	
EF-2	24"Ø EXHAUST FAN - REFER TO 2/S-3	32"W x 32"H	64"	4-PLY 2x8 SPF No.1/No.2	2 JACK STUDS / 1 KING STUD	SEE NOTE 7.
EF-3	18"Ø EXHAUST FAN - REFER TO 2/S-3	21 1/2"W x 21 1/2"H	59"	4-PLY 2x8 SPF No.1/No.2	2 JACK STUDS / 1 KING STUD	SEE NOTE 7.
EV-1	36"W x 36"H EXHAUST VENT	37 1/2"W x 37 1/2"H	54"	4-PLY 2x8 SPF No.1/No.2	ELECTRONICALLY LOUVERED	2 JACK STUDS / 1 KING STUD
IN-1	36"W x 30"H INTAKE VENT	37 1/2"W x 37 1/2"H	54"	2-PLY 2x6 SPF No.1/No.2	ELECTRONICALLY LOUVERED	1 JACK STUD / 1 KING STUD

NOTES:

1. ALL JACK STUDS / KING STUDS TO BE 2x6 SPF No.1 / No.2 IN 2x6 FRAMED WALLS.
2. LAMINATE BUILT UP STUD POSTS IN ACCORDANCE WITH OBC.
3. CONTRACTOR TO CONFIRM ROUGH OPENINGS PRIOR TO CONSTRUCTION.
4. ALL EXTERIOR GRADE DOORS TO BE INSULATED.
5. ALL OVERHEAD DOORS TO BE INSULATED TO THE SATISFACTION OF THE OWNER.
6. PROVIDE SIMPSON STRONG TIE HTT5 ON EACH BUILT-UP COLUMN TO CONNECT COLUMN TO FOUNDATION.
7. WHERE OPENINGS IN LOAD BEARING WALLS HAVE A MAXIMUM WIDTH OF 44" ARE CONSTRUCTED WITH ROUGH OPENINGS THAT FIT BETWEEN THE TRUSSES, PROVIDE 2-PLY 2x6 LINTEL WITH 1 JACK STUD AND 1 KING STUD.

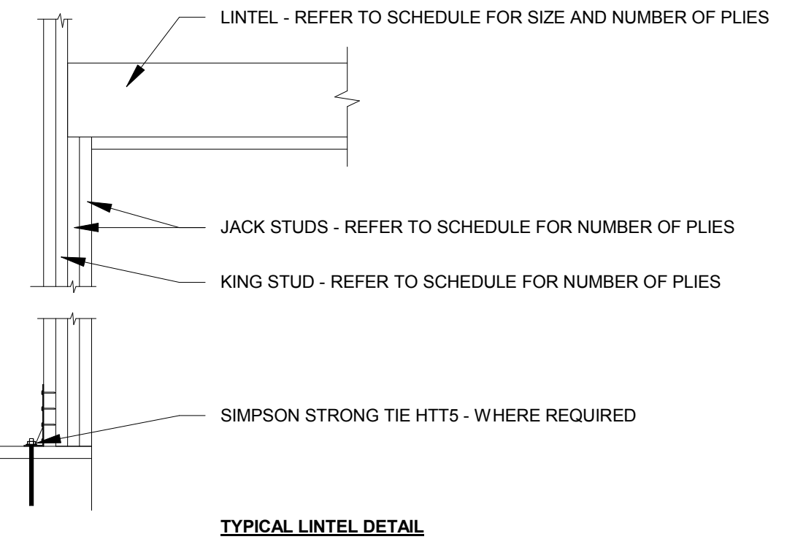
LINTEL - REFER TO SCHEDULE FOR SIZE AND NUMBER OF PLIES
JACK STUDS - REFER TO SCHEDULE FOR NUMBER OF PLIES
KING STUD - REFER TO SCHEDULE FOR NUMBER OF PLIES
SIMPSON STRONG TIE HTT5 - WHERE REQUIRED

TYPICAL LINTEL DETAIL

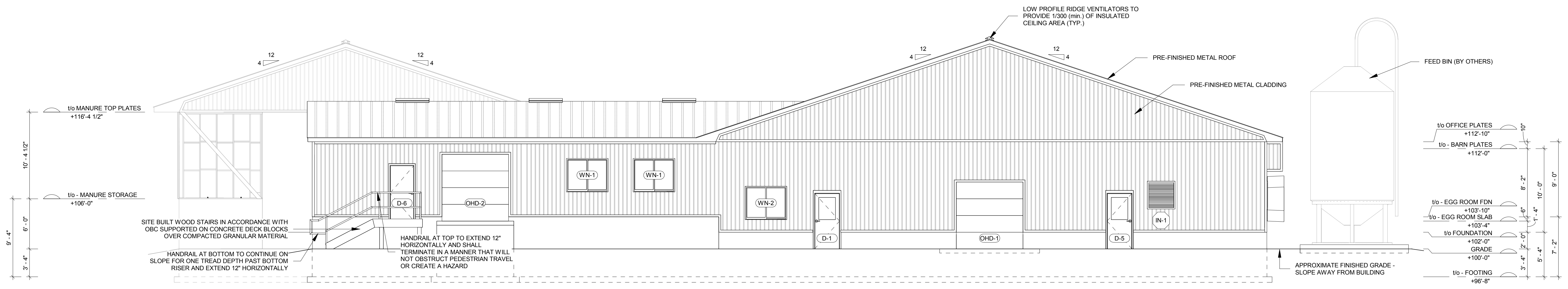
LOW PROFILE RIDGE VENTILATORS TO PROVIDE 1/300 (min.) OF INSULATED CEILING AREA (TYP.)
12
4
PRE-FINISHED METAL ROOF
PRE-FINISHED METAL CLADDING
FEED BIN (BY OTHERS)
t/o MANURE TOP PLATES
+116'-4 1/2"
t/o - MANURE STORAGE
+106'-0"
10' - 4 1/2"
6' - 0"
9' - 4"
3' - 4"
D-6
OHD-2
WN-1
WN-1
WN-2
D-1
OHD-1
D-5
IN-1
SITE BUILT WOOD STAIRS IN ACCORDANCE WITH OBC SUPPORTED ON CONCRETE DECK BLOCKS OVER COMPACTED GRANULAR MATERIAL
HANDRAIL AT BOTTOM TO CONTINUE ON SLOPE FOR ONE TREAD DEPTH PAST BOTTOM RISER AND EXTEND 12" HORIZONTALLY
HANDRAIL AT TOP TO EXTEND 12" HORIZONTALLY AND SHALL TERMINATE IN A MANNER THAT WILL NOT OBSTRUCT PEDESTRIAN TRAVEL OR CREATE A HAZARD
APPROXIMATE FINISHED GRADE - SLOPE AWAY FROM BUILDING
t/o OFFICE PLATES
+112'-10"
t/o - BARN PLATES
+112'-0"
t/o - EGG ROOM FDN
+103'-10"
t/o - EGG ROOM SLAB
+103'-4"
t/o FOUNDATION
+102'-0"
GRADE
+100'-0"
t/o - FOOTING
+96'-8"
10"
8' - 2"
10' - 0"
9' - 0"
6"
1' - 4"
2' - 0"
3' - 4"
5' - 4"
7' - 2"

① NORTH ELEVATION
1/8" = 1'-0"

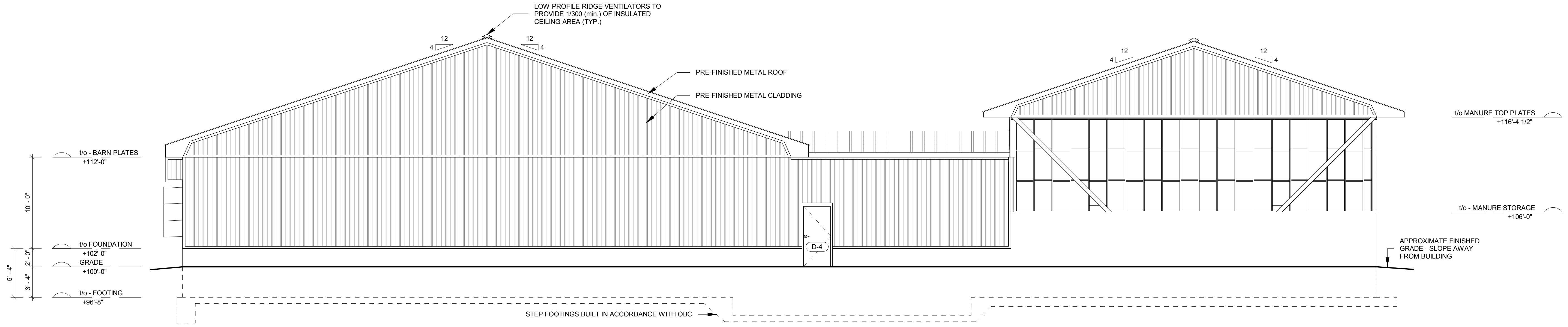
LOW PROFILE RIDGE VENTILATORS TO PROVIDE 1/300 (min.) OF INSULATED CEILING AREA (TYP.)
12
4
PRE-FINISHED METAL ROOF
PRE-FINISHED METAL CLADDING
t/o - BARN PLATES
+112'-0"
t/o FOUNDATION
+102'-0"
GRADE
+100'-0"
t/o - FOOTING
+96'-8"
10' - 0"
2' - 0"
3' - 4"
5' - 4"
D-4
t/o MANURE TOP PLATES
+116'-4 1/2"
t/o - MANURE STORAGE
+106'-0"
10' - 4 1/2"
6' - 0"
9' - 4"
3' - 4"
APPROXIMATE FINISHED GRADE - SLOPE AWAY FROM BUILDING
STEP FOOTINGS BUILT IN ACCORDANCE WITH OBC

② SOUTH ELEVATION
1/8" = 1'-0"

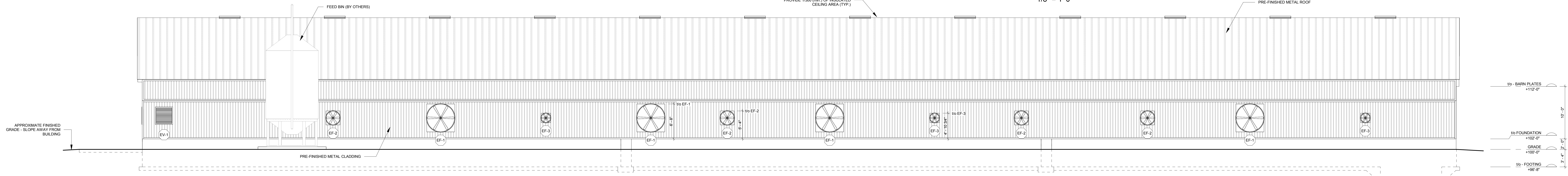
FEED BIN (BY OTHERS)
LOW PROFILE RIDGE VENTILATORS TO PROVIDE 1/300 (min.) OF INSULATED CEILING AREA (TYP.)
PRE-FINISHED METAL ROOF
APPROXIMATE FINISHED GRADE - SLOPE AWAY FROM BUILDING
PRE-FINISHED METAL CLADDING
EV-1
EF-2
EF-1
EF-3
t/o EF-1
t/o EF-2
t/o EF-3
6' - 8"
5' - 4"
4' - 10 3/4"
t/o - BARN PLATES
+112'-0"
t/o FOUNDATION
+102'-0"
GRADE
+100'-0"
t/o - FOOTING
+96'-8"
10' - 0"
2' - 0"
3' - 4"
5' - 4"

③ WEST ELEVATION
1/8" = 1'-0"

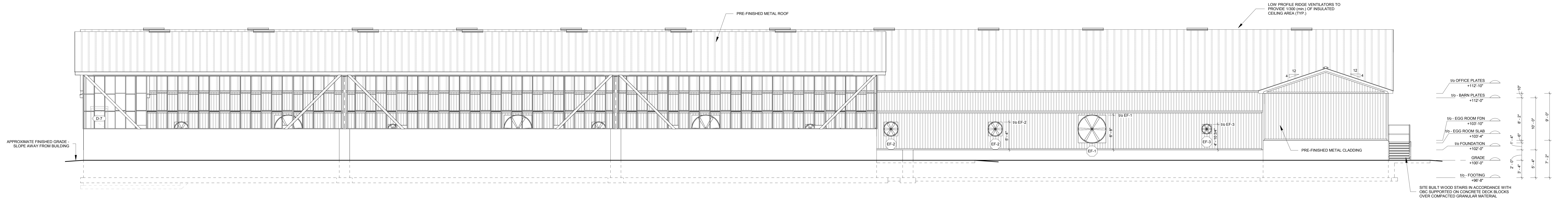
PRE-FINISHED METAL ROOF
LOW PROFILE RIDGE VENTILATORS TO PROVIDE 1/300 (min.) OF INSULATED CEILING AREA (TYP.)
D-7
APPROXIMATE FINISHED GRADE - SLOPE AWAY FROM BUILDING
12
4
EF-2
EF-1
EF-3
t/o EF-1
t/o EF-2
t/o EF-3
5' - 4"
6' - 8"
4' - 10 3/4"
PRE-FINISHED METAL CLADDING
t/o OFFICE PLATES
+112'-10"
t/o - BARN PLATES
+112'-0"
t/o - EGG ROOM FDN
+103'-10"
t/o - EGG ROOM SLAB
+103'-4"
t/o FOUNDATION
+102'-0"
GRADE
+100'-0"
t/o - FOOTING
+96'-8"
10"
8' - 2"
10' - 0"
9' - 0"
6"
1' - 4"
2' - 0"
3' - 4"
5' - 4"
7' - 2"
SITE BUILT WOOD STAIRS IN ACCORDANCE WITH OBC SUPPORTED ON CONCRETE DECK BLOCKS OVER COMPACTED GRANULAR MATERIAL

④ EAST ELEVATION
1/8" = 1'-0"

NORTH

NOTES:

c/w COMPLETE WITH
FDN FOUNDATION
e/w EACH WAY
EX. EXISTING
H HIGH/HORIZONTAL
max. MAXIMUM
min. MINIMUM
OBC ONTARIO BUILDING CODE
o/c ON CENTER
P.T. PRESSURE TREATED
r/w REINFORCED WITH
t/o TOP OF
TYP. TYPICAL
V VERTICAL
W WIDE
WWW WELDED WIRE MESH

No.	REVISION DESCRIPTION	MM/DD/YY	CH'KD
1.	PRELIMINARY FOR DISCUSSION ONLY	05/07/25	TR
2.	REVISED FOR OWNER REVIEW	06/20/25	TR
3.	SITE PLAN - MINOR VARIANCE APPLICATION	07/10/25	TR
4.	ISSUED FOR APPROVAL	07/21/25	TR
5.	REVISED SITE PLAN	08/22/25	TR

CONTRACTOR

08/22/25
T. J. REGIER
100550036

CONSULTANT

MR ENGINEERING AND DESIGN LTD.
CIVIL • COMMERCIAL • AGRICULTURAL
145 Thames Road, West, Unit 4
Exeter, ON, N0M 1S3
Telephone: (519)-317-0128
Email: admin@mrengdesign.com

BRENAIR FARMS INC.
LAYER BARN

7189 PARKHOUSE DRIVE
MELBOURNE, ON
N0L 1T0

ELEVATIONS

PROJECT No. *MR25-027*

SHEET No. S-1

SCALE As indicated

DESIGN	**TR**
DRAWN	**TR**
CHECKED	**TR**
APPROVED	**TR**
DATE	**AUGUST 2025**

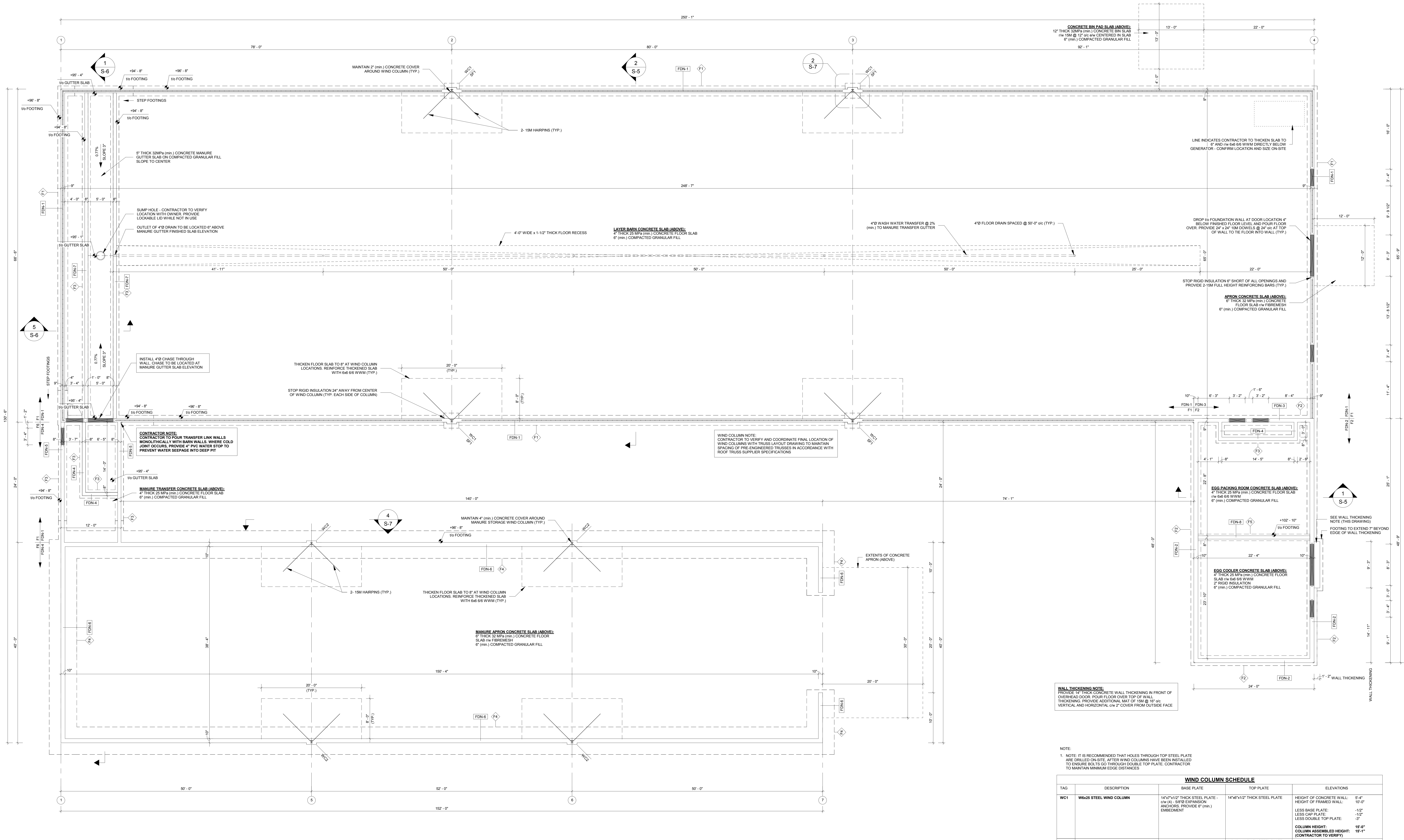
250' - 1"
78' - 0"
80' - 0"
92' - 1"
13' - 0"
22' - 0"
1
2
3
4
1/S-6
2/S-5
2/S-7
5/S-6
4/S-7
1/S-5
+95' - 4" t/o GUTTER SLAB
+94' - 8" t/o FOOTING
+96' - 8" t/o FOOTING
STEP FOOTINGS
5" THICK 32MPa (min.) CONCRETE MANURE GUTTER SLAB ON COMPACTED GRANULAR FILL SLOPE TO CENTER
0.77% SLOPE 3"
MAINTAIN 2" (min.) CONCRETE COVER AROUND WIND COLUMN (TYP.)
WC1
SF1
2- 15M HAIRPINS (TYP.)
FDN-1
F1
CONCRETE BIN PAD SLAB (ABOVE):
12" THICK 32MPa (min.) CONCRETE BIN SLAB r/w 15M @ 12" o/c e/w CENTERED IN SLAB
6" (min.) COMPACTED GRANULAR FILL
LINE INDICATES CONTRACTOR TO THICKEN SLAB TO 6" AND r/w 6x6 6/6 WWM DIRECTLY BELOW GENERATOR - CONFIRM LOCATION AND SIZE ON-SITE
248' - 7"
SUMP HOLE - CONTRACTOR TO VERIFY LOCATION WITH OWNER. PROVIDE LOCKABLE LID WHILE NOT IN USE
OUTLET OF 4"Ø DRAIN TO BE LOCATED 6" ABOVE MANURE GUTTER FINISHED SLAB ELEVATION
+95' - 1" t/o GUTTER SLAB
4'-0" WIDE x 1-1/2" THICK FLOOR RECESS
LAYER BARN CONCRETE SLAB (ABOVE):
4" THICK 25 MPa (min.) CONCRETE FLOOR SLAB
6" (min.) COMPACTED GRANULAR FILL
4"Ø WASH WATER TRANSFER @ 2% (min.) TO MANURE TRANSFER GUTTER
4"Ø FLOOR DRAIN SPACED @ 50'-0" o/c (TYP.)
DROP t/o FOUNDATION WALL AT DOOR LOCATION 4" BELOW FINISHED FLOOR LEVEL AND POUR FLOOR OVER. PROVIDE 24" x 24" 10M DOWELS @ 24" o/c AT TOP OF WALL TO TIE FLOOR INTO WALL (TYP.)
41' - 11"
50' - 0"
25' - 0"
65' - 0"
STOP RIGID INSULATION 6" SHORT OF ALL OPENINGS AND PROVIDE 2-15M FULL HEIGHT REINFORCING BARS (TYP.)
APRON CONCRETE SLAB (ABOVE):
6" THICK 32 MPa (min.) CONCRETE FLOOR SLAB r/w FIBREMESH
6" (min.) COMPACTED GRANULAR FILL
FDN-7
F3
INSTALL 4"Ø CHASE THROUGH WALL. CHASE TO BE LOCATED AT MANURE GUTTER SLAB ELEVATION
THICKEN FLOOR SLAB TO 8" AT WIND COLUMN LOCATIONS. REINFORCE THICKENED SLAB WITH 6x6 6/6 WWM (TYP.)
STOP RIGID INSULATION 24" AWAY FROM CENTER OF WIND COLUMN (TYP. EACH SIDE OF COLUMN)
20' - 0" (TYP.)
8' - 0" (TYP.)
FDN-1 FDN-3
F1 F2
FDN-3
F2
FDN-4
F3
FDN-5
FDN-4
F6
140' - 0"
74' - 1"
MANURE TRANSFER CONCRETE SLAB (ABOVE):
4" THICK 25 MPa (min.) CONCRETE FLOOR SLAB
6" (min.) COMPACTED GRANULAR FILL
12' - 0"
EGG PACKING ROOM CONCRETE SLAB (ABOVE):
4" THICK 25 MPa (min.) CONCRETE FLOOR SLAB r/w 6x6 6/6 WWM
6" (min.) COMPACTED GRANULAR FILL
FDN-8
F5
+102' - 10" t/o FOOTING
SEE WALL THICKENING NOTE (THIS DRAWING)
FOOTING TO EXTEND 7" BEYOND EDGE OF WALL THICKENING
FDN-2
EGG COOLER CONCRETE SLAB (ABOVE):
4" THICK 25 MPa (min.) CONCRETE FLOOR SLAB r/w 6x6 6/6 WWM
2" RIGID INSULATION
6" (min.) COMPACTED GRANULAR FILL
22' - 4"
24' - 0"
1' - 2" WALL THICKENING
WALL THICKENING
48' - 0"
MAINTAIN 4" (min.) CONCRETE COVER AROUND MANURE STORAGE WIND COLUMN (TYP.)
WC2
FDN-6
F4
EXTENTS OF CONCRETE APRON (ABOVE)
MANURE APRON CONCRETE SLAB (ABOVE):
6" THICK 32 MPa (min.) CONCRETE FLOOR SLAB r/w FIBREMESH
6" (min.) COMPACTED GRANULAR FILL
150' - 4"
20' - 0"
30' - 0"
40' - 0"
66' - 6"
130' - 6"
114' - 6"
65' - 9"
48' - 9"
5
6
7
50' - 0"
52' - 0"
152' - 0"

① FOUNDATION PLAN
1/8" = 1'-0"

CONTRACTOR NOTE:
CONTRACTOR TO POUR TRANSFER LINK WALLS MONOLITHICALLY WITH BARN WALLS. WHERE COLD JOINT OCCURS, PROVIDE 4" PVC WATER STOP TO PREVENT WATER SEEPAGE INTO DEEP PIT

WIND COLUMN NOTE:
CONTRACTOR TO VERIFY AND COORDINATE FINAL LOCATION OF WIND COLUMNS WITH TRUSS LAYOUT DRAWING TO MAINTAIN SPACING OF PRE-ENGINEERED TRUSSES IN ACCORDANCE WITH ROOF TRUSS SUPPLIER SPECIFICATIONS

WALL THICKENING NOTE:
PROVIDE 14" THICK CONCRETE WALL THICKENING IN FRONT OF OVERHEAD DOOR. POUR FLOOR OVER TOP OF WALL THICKENING. PROVIDE ADDITIONAL MAT OF 15M @ 16" o/c VERTICAL AND HORIZONTAL c/w 2" COVER FROM OUTSIDE FACE

NOTE:

1. NOTE: IT IS RECOMMENDED THAT HOLES THROUGH TOP STEEL PLATE ARE DRILLED ON-SITE, AFTER WIND COLUMNS HAVE BEEN INSTALLED TO ENSURE BOLTS GO THROUGH DOUBLE TOP PLATE. CONTRACTOR TO MAINTAIN MINIMUM EDGE DISTANCES

WIND COLUMN SCHEDULE

TAG	DESCRIPTION	BASE PLATE	TOP PLATE	ELEVATIONS
WC1	**W6x25 STEEL WIND COLUMN**	14"x7"x1/2" THICK STEEL PLATE - c/w (4) - 5/8"Ø EXPANSION ANCHORS. PROVIDE 6" (min.) EMBEDMENT	14"x6"x1/2" THICK STEEL PLATE	HEIGHT OF CONCRETE WALL: 5'-4" HEIGHT OF FRAMED WALL: 10'-0" LESS BASE PLATE: -1/2" LESS CAP PLATE: -1/2" LESS DOUBLE TOP PLATE: -3" **COLUMN HEIGHT: 15'-0"** **COLUMN ASSEMBLED HEIGHT: 15'-1"** **(CONTRACTOR TO VERIFY)**
WC2	**W6x25 STEEL WIND COLUMN**	14"x7"x1/2" THICK STEEL PLATE - c/w (4) - 5/8"Ø EXPANSION ANCHORS. PROVIDE 6" (min.) EMBEDMENT	14"x6"x1/2" THICK STEEL PLATE	HEIGHT OF CONCRETE WALL: 9'-4" HEIGHT OF FRAMED WALL: 10'-4 1/2" LESS BASE PLATE: -1/2" LESS CAP PLATE: -1/2" LESS DOUBLE TOP PLATE: -3" **COLUMN HEIGHT: 19'-4 1/2"** **COLUMN ASSEMBLED HEIGHT: 19'-5 1/2"** **(CONTRACTOR TO VERIFY)**

FOUNDATION WALL SCHEDULE

TAG	CROSS-SECTION	DESCRIPTION	WALL ASSEMBLY	WALL HEIGHT	MIN. 28 DAY STRENGTH
FDN-1	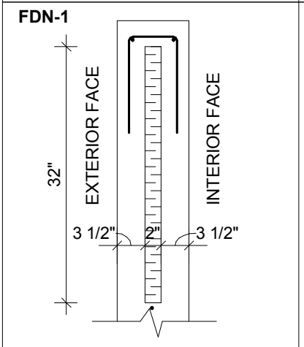	9" CONCRETE SANDWICH WALL c/w 2" RIGID INSULATION (TOP 32" OF WALL)	3-1/2" POURED IN PLACE CONCRETE 2" RIGID INSULATION 3-1/2" POURED IN PLACE CONCRETE TOP OF WALL 10M U-BARS @ 48" o/c 2-10M CONTINUOUS @ TOP OF WALL PROVIDE 1-15M CONTINUOUS UNDER RIGID INSULATION ANCHOR BOLTS: 1/2"Ø ANCHOR BOLT SPACING: - **48**" o/c	5'-4"	A-4: 25MPa
FDN-2	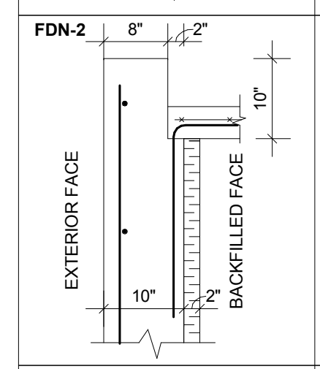	10" CONCRETE WALL c/w 2" WIDE x 10" HIGH LEDGE	10" POURED IN PLACE CONCRETE 48" OF 2" RIGID INSULATION (BACKFILLED FACE OF WALL) REINFORCEMENT VERTICAL STEEL: 15M @ 16" o/c HORIZONTAL STEEL: 15M @ 16" o/c PROVIDE 2" COVER FROM EXTERIOR FACE TO VERTICAL STEEL PROVIDE 24" x 24" 10M DOWELS @ 24" o/c AT TOP OF WALL. LAP WITH WWM ANCHOR BOLTS: 1/2"Ø ANCHOR BOLT SPACING: - **48**" o/c	7'-2"	A-4: 25MPa
FDN-3	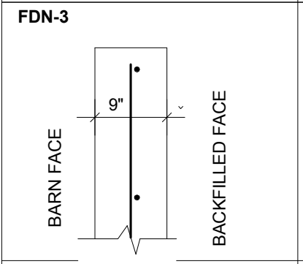	9" CONCRETE WALL	9" POURED IN PLACE CONCRETE REINFORCEMENT VERTICAL STEEL: 15M @ 16" o/c HORIZONTAL STEEL: 15M @ 16" o/c VERTICAL STEEL CENTERED IN WALL ANCHOR BOLTS: 1/2"Ø ANCHOR BOLT SPACING: - **48**" o/c	7'-2"	A-4: 25MPa
FDN-4	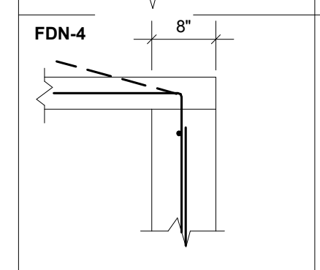	8" CONCRETE WALL	8" POURED IN PLACE CONCRETE REINFORCEMENT: VERTICAL STEEL: 15M @ 16" o/c HORIZONTAL STEEL: 15M @ 16" o/c VERTICAL STEEL TO BE CENTERED IN WALL 15M VERTICALS TO EXTEND 24" ABOVE TOP OF WALL POUR. FIELD BEND 15M VERTICALS INTO CONCRETE SLAB.	6'-4" EGG ROOM & 5'-0" MANURE CONNECTION	A-4: 25MPa
FDN-5	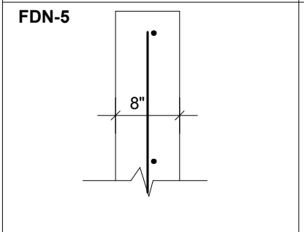	8" CONCRETE WALL	8" POURED IN PLACE CONCRETE REINFORCEMENT VERTICAL STEEL: 15M @ 16" o/c HORIZONTAL STEEL: 15M @ 16" o/c VERTICAL STEEL CENTERED IN WALL ANCHOR BOLTS: 1/2"Ø ANCHOR BOLT SPACING: **- 48**" o/c	7'-4"	A-4: 25MPa
FDN-6	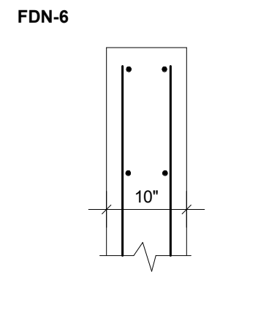	10" CONCRETE WALL	10" POURED IN PLACE CONCRETE REINFORCEMENT (MANURE FACE) VERTICAL STEEL: 15M @ 10" o/c HORIZONTAL STEEL: 15M @ 16" o/c (EXTERIOR FACE) VERTICAL STEEL: 15M @ 16" o/c HORIZONTAL STEEL: 15M @ 16" o/c VERTICAL STEEL TO HAVE 2" COVER FROM FACE OF FOUNDATION WALL ANCHOR BOLTS: 1/2"Ø ANCHOR BOLT SPACING: **- 48**" o/c	9'-4"	A-2: 32MPa
FDN-7	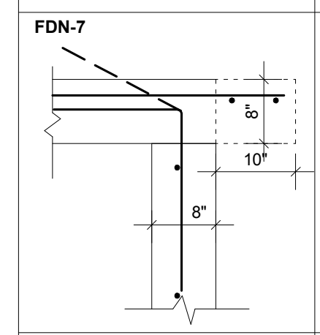	8" CONCRETE WALL	8" POURED IN PLACE CONCRETE REINFORCEMENT: VERTICAL STEEL: 15M @ 16" o/c HORIZONTAL STEEL: 15M @ 16" o/c VERTICAL STEEL TO BE CENTERED IN WALL 15M VERTICALS TO EXTEND 24" ABOVE TOP OF WALL POUR. FIELD BEND 15M VERTICALS INTO CONCRETE SLAB. REFER TO SECTION 1/S-6 FOR ADDITIONAL DETAILS	4'-8"	A-4: 25MPa
FDN-8	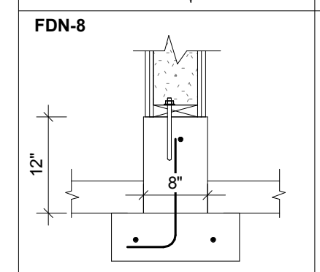	8" x 12" CONCRETE CURB	8" POURED IN PLACE CONCRETE REINFORCEMENT 12" VERTICAL x 6" HORIZONTAL 15M DOWELS @ 24" o/c FROM FOOTING BELOW 1-15M CONTINUOUS HORIZONTAL AT TOP OF WALL ANCHOR BOLTS: 1/2"Ø ANCHOR BOLT SPACING: **- 48**" o/c	12"	A-4: 25MPa

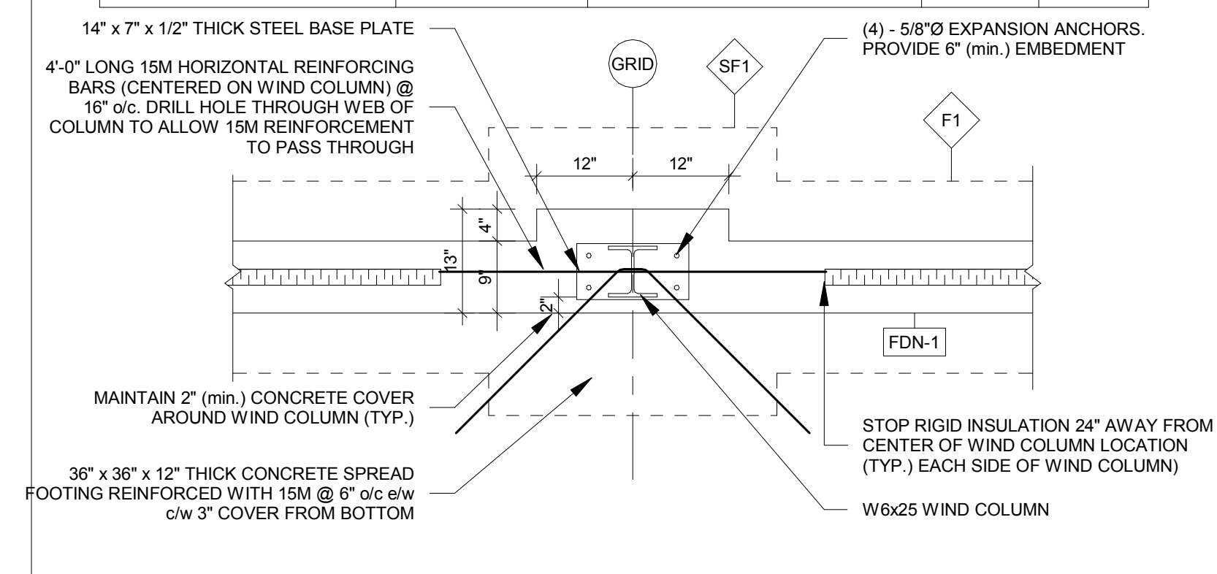
14" x 7" x 1/2" THICK STEEL BASE PLATE
4'-0" LONG 15M HORIZONTAL REINFORCING BARS (CENTERED ON WIND COLUMN) @ 16" o/c. DRILL HOLE THROUGH WEB OF COLUMN TO ALLOW 15M REINFORCEMENT TO PASS THROUGH
GRID
SF1
F1
(4) - 5/8"Ø EXPANSION ANCHORS. PROVIDE 6" (min.) EMBEDMENT
12"
12"
4"
13"
9"
2"
FDN-1
MAINTAIN 2" (min.) CONCRETE COVER AROUND WIND COLUMN (TYP.)
36" x 36" x 12" THICK CONCRETE SPREAD FOOTING REINFORCED WITH 15M @ 6" o/c e/w c/w 3" COVER FROM BOTTOM
STOP RIGID INSULATION 24" AWAY FROM CENTER OF WIND COLUMN LOCATION (TYP.) EACH SIDE OF WIND COLUMN)
W6x25 WIND COLUMN

② WIND COLUMN WC1 WITHIN WALL DETAIL
1/2" = 1'-0"

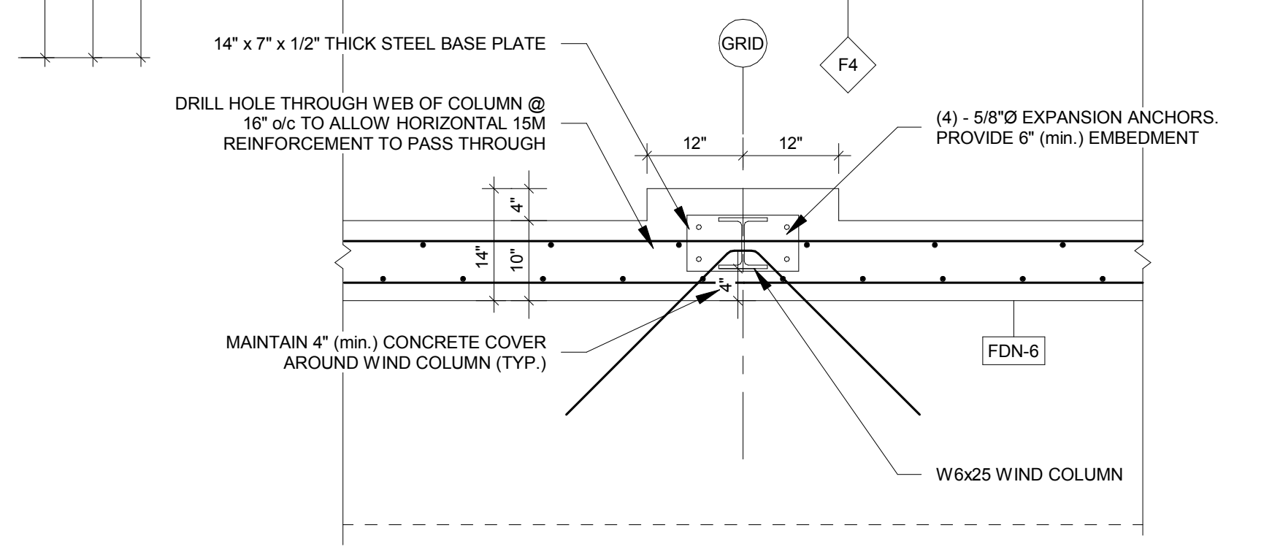
14" x 7" x 1/2" THICK STEEL BASE PLATE
DRILL HOLE THROUGH WEB OF COLUMN @ 16" o/c TO ALLOW HORIZONTAL 15M REINFORCEMENT TO PASS THROUGH
GRID
F4
(4) - 5/8"Ø EXPANSION ANCHORS. PROVIDE 6" (min.) EMBEDMENT
12"
12"
4"
14"
10"
4"
MAINTAIN 4" (min.) CONCRETE COVER AROUND WIND COLUMN (TYP.)
FDN-6
W6x25 WIND COLUMN

③ WIND COLUMN WC2 WITHIN WALL DETAIL
1/2" = 1'-0"

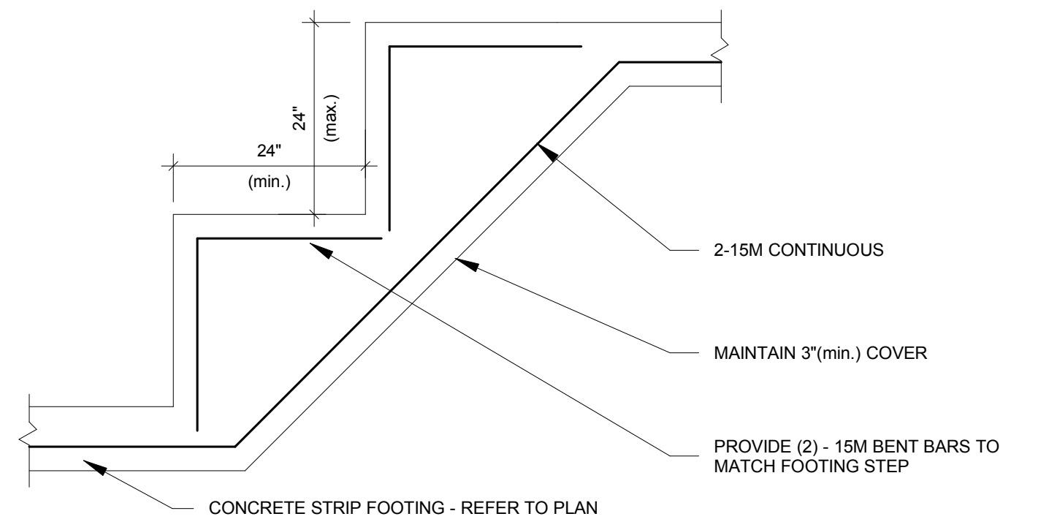
24" (max.)
24" (min.)
2-15M CONTINUOUS
MAINTAIN 3"(min.) COVER
PROVIDE (2) - 15M BENT BARS TO MATCH FOOTING STEP
CONCRETE STRIP FOOTING - REFER TO PLAN

④ TYPICAL STEP FOOTING DETAIL
1/2" = 1'-0"

NORTH

NOTES:

c/w	COMPLETE WITH
FDN	FOUNDATION
e/w	EACH WAY
EX.	EXISTING
H	HIGH/HORIZONTAL
max.	MAXIMUM
min.	MINIMUM
OBC	ONTARIO BUILDING CODE
o/c	ON CENTER
P.T.	PRESSURE TREATED
r/w	REINFORCED WITH
t/o	TOP OF
TYP.	TYPICAL
V	VERTICAL
W	WIDE
WWW	WELDED WIRE MESH

No.	REVISION DESCRIPTION	MM/DD/YY	CH'KD
1.	PRELIMINARY FOR DISCUSSION ONLY	05/07/25	TR
2.	REVISED FOR OWNER REVIEW	06/20/25	TR
3.	SITE PLAN - MINOR VARIANCE APPLICATION	07/10/25	TR
4.	ISSUED FOR APPROVAL	07/21/25	TR
5.	REVISED SITE PLAN	08/22/25	TR

FOOTING SCHEDULE

TAG	CROSS-SECTION	DESCRIPTION	MIN. 28 DAY STRENGTH
F1	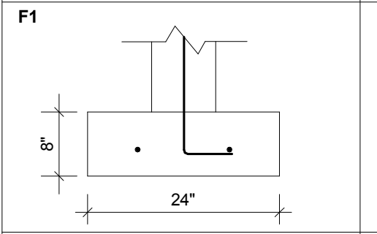	24" WIDE x 8" THICK CONCRETE STRIP FOOTING REINFORCED WITH 2-15M CONTINUOUS. PROVIDE 30"V x 6"H 15M DOWELS @ 24" o/c	N: 20MPa
F2	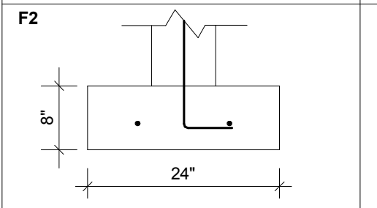	24" WIDE x 8" THICK CONCRETE STRIP FOOTING REINFORCED WITH 2-15M CONTINUOUS. PROVIDE 30"V x 6"H 15M DOWELS @ 16" o/c	N: 20MPa
F3	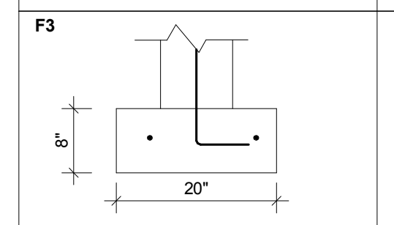	20" WIDE x 8" THICK CONCRETE STRIP FOOTING REINFORCED WITH 2-15M CONTINUOUS. PROVIDE 30" VERTICAL x 6" HORIZONTAL 15M DOWELS @ 16" o/c	N: 20MPa
F4	REFER TO SECTION 4/S-6 FOR DETAILS	66" WIDE x 10" THICKs STRIP FOOTING r/w WITH 15M SPACED @ 12" o/c e/w c/w 3" COVER FROM BOTTOM. PROVIDE DOUBLE LAYER OF 15M DOWELS 36" VERTICAL x 12" HORIZONTAL SPACED AS PER SECTION 4/S-6	A-2: 32MPa
F5	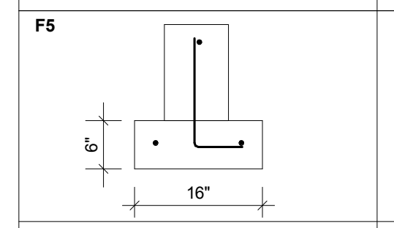	16" WIDE x 6" THICK CONCRETE STRIP FOOTING REINFORCED WITH 2-15M CONTINUOUS. PROVIDE 12" VERTICAL x 6" HORIZONTAL 15M DOWELS @ 24" o/c	N: 20MPa
SF1	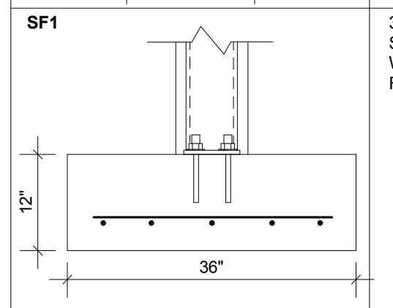	36" x 36" x 12" THICK CONCRETE SPREAD FOOTING REINFORCED WITH 15M @ 6" o/c e/w c/w 3" COVER FROM BOTTOM	N: 20MPa

CONTRACTOR

08/22/25
T. J. REGIER
100550036

CONSULTANT

ENGINEERING AND DESIGN LTD.
CIVIL • COMMERCIAL • AGRICULTURAL

145 Thames Road, West, Unit 4
Exeter, ON, N0M 1S3
Telephone: (519)-317-0128
Email: admin@mrengdesign.com

BRENAIR FARMS INC.
LAYER BARN

7189 PARKHOUSE DRIVE
MELBOURNE, ON
N0L 1T0

FOUNDATION PLAN - SECTIONS & DETAILS

PROJECT No. *MR25-027*

SHEET No. S-2

SCALE As indicated

DESIGN	**TR**
DRAWN	**TR**
CHECKED	**TR**
APPROVED	**TR**
DATE	**AUGUST 2025**

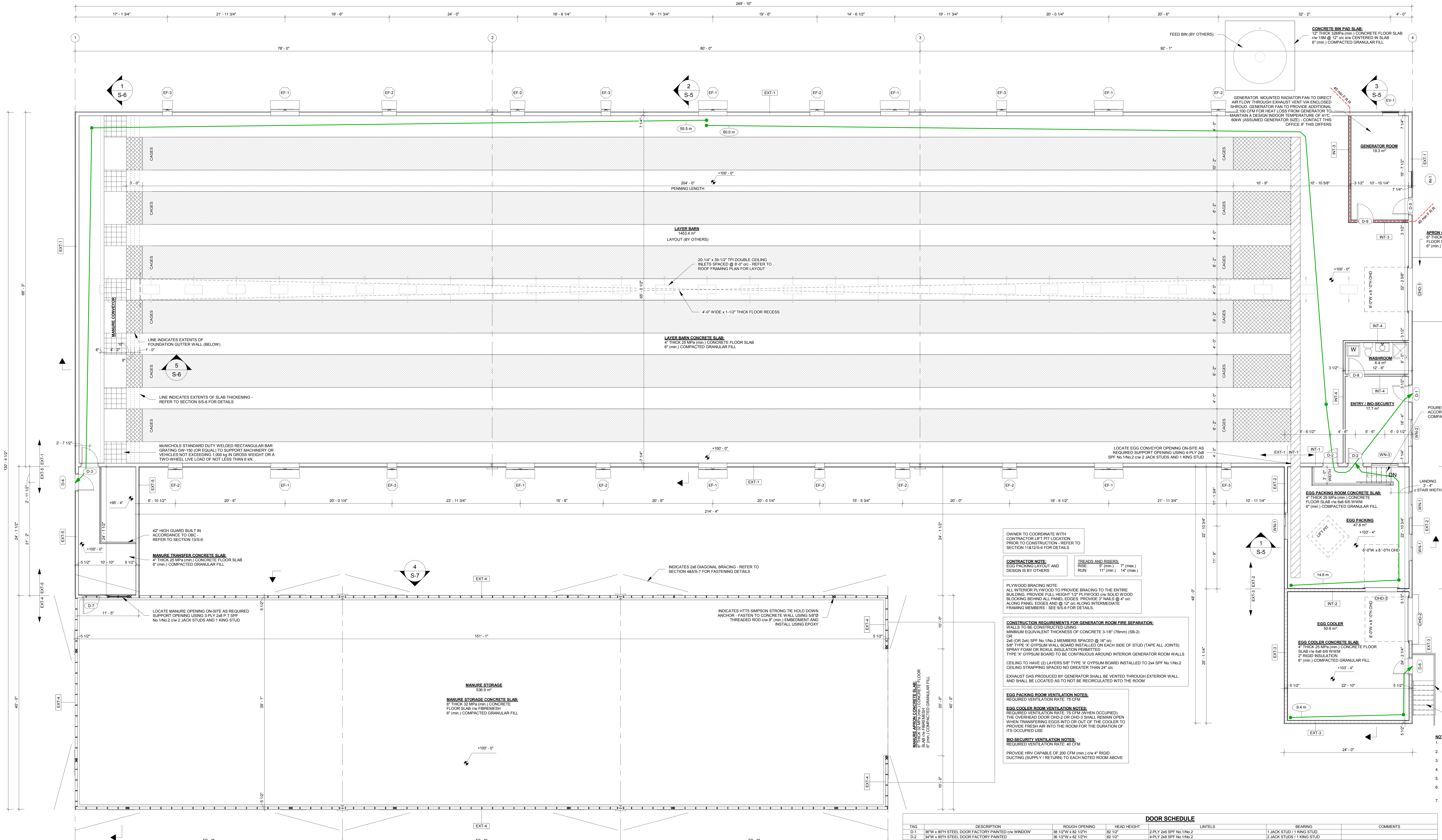

CONCRETE BIN PAD SLAB:
12" THICK 32MPa (min.) CONCRETE FLOOR SLAB
r/w 15M @ 12" o/c e/w CENTERED IN SLAB
6" (min.) COMPACTED GRANULAR FILL

GENERATOR MOUNTED RADIATOR FAN TO DIRECT AIR FLOW THROUGH EXHAUST VENT VIA ENCLOSED SHROUD. GENERATOR FAN TO PROVIDE ADDITIONAL 2,100 CFM FOR HEAT LOSS FROM GENERATOR TO MAINTAIN A DESIGN INDOOR TEMPERATURE OF 41℃. 60kW (ASSUMED GENERATOR SIZE) - CONTACT THIS OFFICE IF THIS DIFFERS

APRON CONCRETE SLAB:
6" THICK 32 MPa (min.) CONCRETE
FLOOR SLAB r/w FIBREMESH
6" (min.) COMPACTED GRANULAR FILL

LAYER BARN CONCRETE SLAB:
4" THICK 25 MPa (min.) CONCRETE FLOOR SLAB
6" (min.) COMPACTED GRANULAR FILL

McNICHOLS STANDARD DUTY WELDED RECTANGULAR BAR GRATING GW-150 (OR EQUAL) TO SUPPORT MACHINERY OR VEHICLES NOT EXCEEDING 1,000 kg IN GROSS WEIGHT OR A TWO-WHEEL LIVE LOAD OF NOT LESS THAN 6 kN.

LOCATE EGG CONVEYOR OPENING ON-SITE AS REQUIRED SUPPORT OPENING USING 4-PLY 2x8 SPF No.1/No.2 c/w 2 JACK STUDS AND 1 KING STUD

42" HIGH GUARD BUILT IN ACCORDANCE TO OBC - REFER TO SECTION 13/S-6

MANURE TRANSFER CONCRETE SLAB:
4" THICK 25 MPa (min.) CONCRETE FLOOR SLAB
6" (min.) COMPACTED GRANULAR FILL

INDICATES 2x6 DIAGONAL BRACING - REFER TO SECTION 4&5/S-7 FOR FASTENING DETAILS

LOCATE MANURE OPENING ON-SITE AS REQUIRED SUPPORT OPENING USING 3-PLY 2x8 P.T SPF No.1/No.2 c/w 2 JACK STUDS AND 1 KING STUD

INDICATES HTT5 SIMPSON STRONG TIE HOLD DOWN ANCHOR - FASTEN TO CONCRETE WALL USING 5/8"Ø THREADED ROD c/w 8" (min.) EMBEDMENT AND INSTALL USING EPOXY

MANURE STORAGE CONCRETE SLAB:
6" THICK 32 MPa (min.) CONCRETE
FLOOR SLAB r/w FIBREMESH
6" (min.) COMPACTED GRANULAR FILL

MANURE APRON CONCRETE SLAB:
6" THICK 32 MPa (min.) CONCRETE FLOOR
SLAB r/w FIBREMESH
6" (min.) COMPACTED GRANULAR FILL

EGG PACKING ROOM CONCRETE SLAB:
4" THICK 25 MPa (min.) CONCRETE
FLOOR SLAB r/w 6x6 6/6 WWM
6" (min.) COMPACTED GRANULAR FILL

EGG COOLER ROOM CONCRETE SLAB:
4" THICK 25 MPa (min.) CONCRETE FLOOR
SLAB r/w 6x6 6/6 WWM
2" RIGID INSULATION
6" (min.) COMPACTED GRANULAR FILL

POURED IN PLACE CONCRETE STAIRS ACCORDANCE WITH OBC OVER COMPACTED GRANULAR MATERIAL

OWNER TO COORDINATE WITH CONTRACTOR LIFT PIT LOCATION PRIOR TO CONSTRUCTION - REFER TO SECTION 11&12/S-6 FOR DETAILS

CONTRACTOR NOTE:
EGG PACKING LAYOUT AND DESIGN IS BY OTHERS

TREADS AND RISERS:

RISE:	5" (min.)	7" (max.)
RUN:	11" (min.)	14" (max.)

PLYWOOD BRACING NOTE:
ALL INTERIOR PLYWOOD TO PROVIDE BRACING TO THE ENTIRE BUILDING. PROVIDE FULL HEIGHT 1/2" PLYWOOD c/w SOLID WOOD BLOCKING BEHIND ALL PANEL EDGES. PROVIDE 3" NAILS @ 4" o/c ALONG PANEL EDGES AND @ 12" o/c ALONG INTERMEDIATE FRAMING MEMBERS - SEE 6/S-6 FOR DETAILS.

CONSTRUCTION REQUIREMENTS FOR GENERATOR ROOM FIRE SEPARATION:
WALLS TO BE CONSTRUCTED USING
MINIMUM EQUIVALENT THICKNESS OF CONCRETE 3-1/6" (76mm) (SB-2)
OR
2x6 (OR 2x4) SPF No.1/No.2 MEMBERS SPACED @ 16" o/c
5/8" TYPE 'X' GYPSUM WALL BOARD INSTALLED ON EACH SIDE OF STUD (TAPE ALL JOINTS)
SPRAY FOAM OR ROXUL INSULATION PERMITTED
TYPE 'X' GYPSUM BOARD TO BE CONTINUOUS AROUND INTERIOR GENERATOR ROOM WALLS

CEILING TO HAVE (2) LAYERS 5/8" TYPE 'X' GYPSUM BOARD INSTALLED TO 2x4 SPF No.1/No.2 CEILING STRAPPING SPACED NO GREATER THAN 24" o/c

EXHAUST GAS PRODUCED BY GENERATOR SHALL BE VENTED THROUGH EXTERIOR WALL AND SHALL BE LOCATED AS TO NOT BE RECIRCULATED INTO THE ROOM

EGG PACKING ROOM VENTILATION NOTES:
REQUIRED VENTILATION RATE: 75 CFM

EGG COOLER ROOM VENTILATION NOTES:
REQUIRED VENTILATION RATE: 75 CFM (WHEN OCCUPIED)
THE OVERHEAD DOOR OHD-2 OR OHD-3 SHALL REMAIN OPEN WHEN TRANSFERING EGGS INTO OR OUT OF THE COOLER TO PROVIDE FRESH AIR INTO THE ROOM FOR THE DURATION OF ITS OCCUPIED USE

BIO-SECURITY VENTILATION NOTES:
REQUIRED VENTILATION RATE: 40 CFM

PROVIDE HRV CAPABLE OF 200 CFM (min.) c/w 4" RIGID DUCTING (SUPPLY / RETURN) TO EACH NOTED ROOM ABOVE

42" HIGH GUARD c/w HAND RAIL BUILT IN ACCORDANCE TO OBC

SITE BUILT WOOD STAIRS IN ACCORDANCE WITH OBC SUPPORTED ON CONCRETE DECK BLOCKS OVER COMPACTED GRANULAR MATERIAL

① GROUND FLOOR PLAN
1/8" = 1'-0"

NOTES:
1. ALL JACK STUDS / KING STUDS TO BE 2x6 SPF No.1 / No.2 IN 2x6 FRAMED WALLS.
2. LAMINATE BUILT UP STUD POSTS IN ACCORDANCE WITH OBC.
3. CONTRACTOR TO CONFIRM ROUGH OPENINGS PRIOR TO CONSTRUCTION.
4. ALL EXTERIOR GRADE DOORS TO BE INSULATED.
5. ALL OVERHEAD DOORS TO BE INSULATED TO THE SATISFACTION OF THE OWNER.
6. PROVIDE SIMPSON STRONG TIE HTT5 ON EACH BUILT-UP COLUMN TO CONNECT COLUMN TO FOUNDATION.
7. WHERE OPENINGS IN LOAD BEARING WALLS HAVE A MAXIMUM WIDTH OF 44" ARE CONSTRUCTED WITH ROUGH OPENINGS THAT FIT BETWEEN THE TRUSSES, PROVIDE 2-PLY 2x6 LINTEL WITH 1 JACK STUD AND 1 KING STUD.

NOTE:

1. NOTE: IT IS RECOMMENDED THAT HOLES THROUGH TOP STEEL PLATE ARE DRILLED ON-SITE, AFTER WIND COLUMNS HAVE BEEN INSTALLED TO ENSURE BOLTS GO THROUGH DOUBLE TOP PLATE. CONTRACTOR TO MAINTAIN MINIMUM EDGE DISTANCES

DOOR SCHEDULE

TAG	DESCRIPTION	ROUGH OPENING	HEAD HEIGHT	LINTELS	BEARING	COMMENTS
D-1	36"W x 80"H STEEL DOOR FACTORY PAINTED c/w WINDOW	38 1/2"W x 82 1/2"H	82 1/2"	2-PLY 2x6 SPF No.1/No.2	1 JACK STUD / 1 KING STUD	
D-2	34"W x 80"H STEEL DOOR FACTORY PAINTED	36 1/2"W x 82 1/2"H	82 1/2"	4-PLY 2x8 SPF No.1/No.2	2 JACK STUDS / 1 KING STUD	
D-3	36"W x 80"H STEEL DOOR FACTORY PAINTED	38 1/2"W x 82 1/2"H	82 1/2"	4-PLY 2x8 SPF No.1/No.2	2 JACK STUDS / 1 KING STUD	
D-4	36"W x 80"H STEEL DOOR FACTORY PAINTED	38 1/2"W x 82 1/2"H	82 1/2"	2-PLY 2x6 SPF No.1/No.2	1 JACK STUD / 1 KING STUD	
D-5	36"W x 80"H STEEL DOOR FACTORY PAINTED c/w WINDOW	38 1/2"W x 82 1/2"H	82 1/2"	2-PLY 2x6 SPF No.1/No.2	1 JACK STUD / 1 KING STUD	
D-6	36" W x 80"H STEEL DOOR FACTORY PAINTED	38 1/2"W x 82 1/2"H	82 1/2"	2-PLY 2x8 SPF No.1/No.2	1 JACK STUD / 1 KING STUD	
D-7	36"W x 48"H EXTERIOR NON-ROT DOOR	38 1/2"W x 50 1/2"H	50 1/2"	3-PLY 2x8 SPF No.1/No.2	2 JACK STUDS / 1 KING STUD	VIEWING DOOR - NOT FOR EXIT
D-8	36" W x 80"H INTERIOR NON-ROT DOOR	38 1/2"W x 82 1/2"H	82 1/2"	2-PLY 2x4 SPF No.1/No.2	1 JACK STUD / 1 KING STUD	
D-9	36" W x 80"H 45 min F.R.R METAL DOOR	38 1/2"W x 82 1/2"H	82 1/2"	2-PLY 2x4 SPF No.1/No.2	1 JACK STUD / 1 KING STUD	c/w SELF CLOSING DEVICE

WINDOW SCHEDULE

TAG	DESCRIPTION	ROUGH OPENING	HEIGHT A.F.F.	LINTEL	BEARING	COMMENTS
WN-1	60"W x 48"H SLIDER WINDOW	61"W x 49"H	91"	2-PLY 2x8 SPF No.1/No.2	1 JACK STUD / 1 KING STUD	
WN-2	60"W x 48"H SLIDER WINDOW	61"W x 49"H	91"	2-PLY 2x6 SPF No.1/No.2	1 JACK STUD / 1 KING STUD	
WN-3	60"W x 48"H FIIXED WINDOW	61"W x 49"H	91"	3-PLY 2x10 SFP No.1/No.2	2 JACK STUDS / 1 KING STUD	

OVERHEAD DOOR SCHEDULE

TAG	DESCRIPTION	ROUGH OPENING	HEAD HEIGHT	LINTELS	BEARING	COMMENTS
OHD-1	8'-0"W x 8'-0"H OVERHEAD DOOR - WITHOUT WINDOWS	8' - 0"W x 8' - 0"H	8' - 0"	3-PLY 2x10 SPF No.1/No.2	2 JACK STUDS / 1 KING STUD	
OHD-2	8'-0"W x 8'-0"H OVERHEAD DOOR - WITHOUT WINDOWS	8' - 0"W x 8' - 0"H	8' - 0"	3-PLY 2x8 SPF No.1/No.2	2 JACK STUDS / 1 KING STUD	
OHD-3	6'-0"W x 8'-0"H OVERHEAD DOOR	6' - 0"W x 8' - 0"H	8' - 0"	2-PLY 2x8 SPF No.1/No.2	1 JACK STUD / 1 KING STUD	

EXHAUST FAN SCHEDULE

TAG	DESCRIPTION	ROUGH OPENING	HEAD HEIGHT	LINTEL	BEARING	COMMENTS
EF-1	54"Ø EXHAUST FAN - REFER TO 2/S-3	64"W x 64"H	80"	4-PLY 2x10 SPF No.1/No.2	2 JACK STUDS / 1 KING STUD	
EF-2	24"Ø EXHAUST FAN - REFER TO 2/S-3	32"W x 32"H	64"	4-PLY 2x8 SPF No.1/No.2	2 JACK STUDS / 1 KING STUD	SEE NOTE 7.
EF-3	18"Ø EXHAUST FAN - REFER TO 2/S-3	21 1/2"W x 21 1/2"H	59"	4-PLY 2x8 SPF No.1/No.2	2 JACK STUDS / 1 KING STUD	SEE NOTE 7.
EV-1	36"W x 36"H EXHAUST VENT	37 1/2"W x 37 1/2"H	54"	4-PLY 2x8 SPF No.1/No.2	ELECTRONICALLY LOUVERED	2 JACK STUDS / 1 KING STUD
IN-1	36"W x 30"H INTAKE VENT	37 1/2"W x 37 1/2"H	54"	2-PLY 2x6 SPF No.1/No.2	ELECTRONICALLY LOUVERED	1 JACK STUD / 1 KING STUD

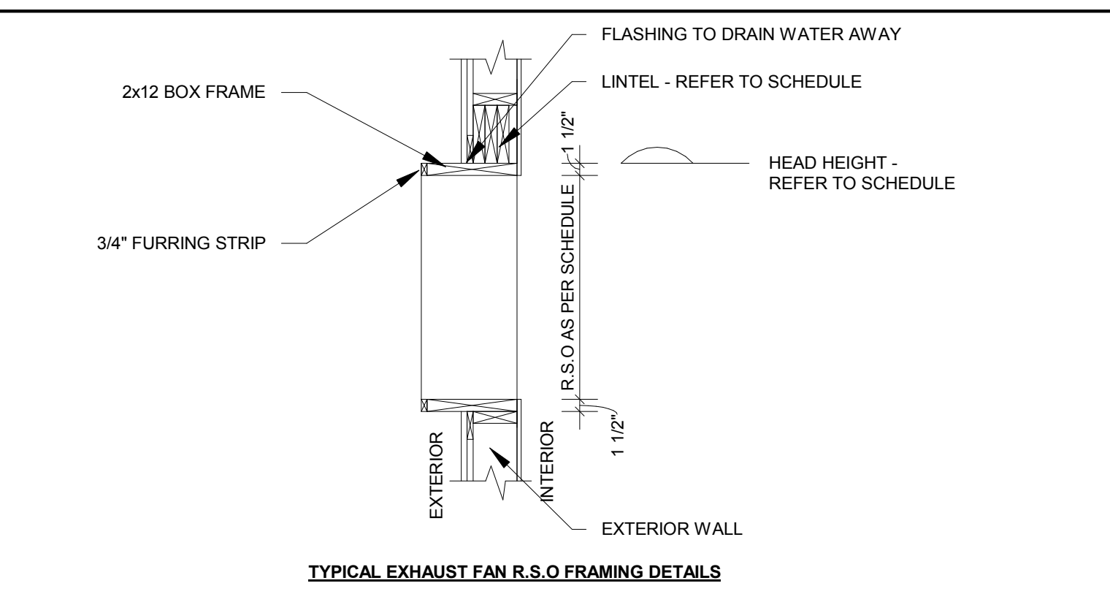

TYPICAL EXHAUST FAN R.S.O FRAMING DETAILS

② FRAMING AROUND EXHAUST FANS (BLACK OUT FANS)
1/2" = 1'-0"

WALL SCHEDULE

TAG	CROSS-SECTION	DESCRIPTION	WALL ASSEMBLY	WALL HEIGHT
EXT-1	EXTERIOR FACE INTERIOR FACE	2x8 FRAMED WALL	**EXTERIOR** 29ga. HI-RIB STEEL c/w SCREW FASTENERS 1x4 STRAPPING @ 24" o/c TYVEK AIR BARRIER (OR EQUIVALENT) 2x8 SPF No.1/No.2 WOOD STUDS @ **24**" o/c SOLID WOOD BLOCKING @ 48" o/c VERTICALLY R-28 ROXUL BATT INSULATION 6mil POLY VAPOR BARRIER 1/2" THICK PAINTED PLYWOOD SHEATHING STITCH NAILED TO STUDS WHERE THERE IS NO PLYWOOD SHEATHING PROVIDE RT7A BY USP (OR EQUAL) HOLD DOWN ANCHOR AT EACH STUD ATTACHING DOUBLE TOP PLATE TO STUD WALL FRAMING STUDS TO ALIGN WITH TRUSSES ABOVE	10'-0"
EXT-2	EXTERIOR FACE INTERIOR FACE	2x6 FRAMED WALL	**EXTERIOR** 29ga. HI-RIB STEEL c/w SCREW FASTENERS 1x4 STRAPPING @ 24" o/c TYVEK AIR BARRIER (OR EQUIVALENT) 2x6 SPF No.1/No.2 WOOD STUDS @ **24**" o/c SOLID WOOD BLOCKING MID-HEIGHT R-22 ROXUL BATT INSULATION 6mil POLY VAPOR BARRIER 7/16" OSB SHEATHING STITCH NAILED TO STUDS TRUSSCORE PVC LINER PANEL STUDS TO ALIGN WITH TRUSSES ABOVE	9'-0"
EXT-3	EXTERIOR FACE INTERIOR FACE	2x6 FRAMED WALL	**EXTERIOR** 29ga. HI-RIB STEEL c/w SCREW FASTENERS 1x4 STRAPPING @ 24" o/c TYVEK AIR BARRIER (OR EQUIVALENT) 2x6 SPF No.1/No.2 WOOD STUDS @ **24**" o/c SOLID WOOD BLOCKING MID-HEIGHT SPRAY FOAM INSULATION (FILL VOID) 6mil POLY VAPOR BARRIER 7/16" OSB SHEATHING STITCH NAILED TO STUDS TRUSSCORE PVC LINER PANEL STUDS TO ALIGN WITH TRUSSES ABOVE	9'-0"
EXT-4		2x6 FRAMED WALL	**EXTERIOR** 2x6 SPF No.1/No.2 P.T WOOD STUDS @ **24**" o/c SOLID WOOD BLOCKING @ THIRD POINTS PROVIDE RT7A BY USP (OR EQUAL) HOLD DOWN ANCHOR AT EACH STUD ATTACHING DOUBLE TOP PLATE TO STUD WALL FRAMING PROVIDE RT3A BY USP (OR EQUAL) HOLD DOWN ANCHOR AT EACH STUD ATTACHING SILL PLATE TO STUD WALL FRAMING STUDS TO ALIGN WITH TRUSSES ABOVE	10'-4 1/2"
EXT-5	EXTERIOR FACE INTERIOR FACE	2x6 FRAMED WALL	**EXTERIOR** 29ga. HI-RIB STEEL c/w SCREW FASTENERS 1x4 STRAPPING @ 24" o/c TYVEK AIR BARRIER (OR EQUIVALENT) 2x6 SPF No.1/No.2 WOOD STUDS @ **24**" o/c SOLID WOOD BLOCKING @ 48" o/c VERTICALLY STUDS TO ALIGN WITH TRUSSES ABOVE	10'-0"
INT-1	EGG PACKING ROOM BARN FACE	2x8 FRAMED WALL	**EGG PACKING ROOM** TRUSSCORE PVC LINER PANEL 7/16" OSB SHEATHING STITCH NAILED TO STUDS TYVEK AIR BARRIER (OR EQUIVALENT) 2x8 SPF No.1/No.2 WOOD STUDS @ **24**" o/c SOLID WOOD BLOCKING @ 48" o/c VERTICALLY R-28 ROXUL BATT INSULATION 6mil POLY VAPOR BARRIER (WARM SIDE OF WALL) 1/2" THICK PAINTED PLYWOOD SHEATHING STITCH NAILED TO STUDS **BARN FACE** STUDS TO ALIGN WITH TRUSSES	8'-2"
INT-2	EGG COOLER EGG PACKING	2x6 FRAMED WALL	**EGG COOLER** TRUSSCORE PVC LINER PANEL 7/16" OSB SHEATHING STITCH NAILED TO STUDS 2x6 SPF No.1/No.2 WOOD STUDS @ **24**" o/c SPRAY FOAM INSULATION (FILL VOID) 6mil POLY VAPOR BARRIER (WARM SIDE OF WALL) 7/16" OSB SHEATHING STITCH NAILED TO STUDS TRUSSCORE PVC LINER PANEL **EGG PACKING**	9'-0"
INT-3	BARN FACE GENERATOR ROOM	2x4 FRAMED WALL 45 min F.R.R	**BARN SIDE** 1/2" THICK PAINTED PLYWOOD SHEATHING STITCH NAILED TO STUDS 5/8" THICK TYPE 'X' GYPSUM WALL BOARD 2x4 SPF No.1/No.2 WOOD STUDS @ **16**" o/c R-14 ROXUL BATT INSULATION 5/8" THICK TYPE 'X' GYPSUM WALL BOARD 1x4 STRAPPING SPACED @ 24" o/c LOW-RIB STEEL c/w SCREW FASTENERS **GENERATOR ROOM** PROVIDE 6" HIGH CONCRETE CURB AT BASE OF WALL - SEE DETAIL 10 / S-6 FOR DETAILS	11'-6"
INT-4	BARN FACE BIO-SECURITY	2x4 FRAMED WALL	**BARN SIDE** 1/2" THICK PAINTED PLYWOOD SHEATHING STITCH NAILED TO STUDS 2x4 SPF No.1/No.2 WOOD STUDS @ **24**" o/c 1x4 STRAPPING SPACED @ 24" o/c LOW-RIB STEEL c/w SCREW FASTENERS **BIO-SECURITY** PROVIDE 6" HIGH CONCRETE CURB AT BASE OF WALL - SEE DETAIL 10 / S-6 FOR DETAILS	11'-6"

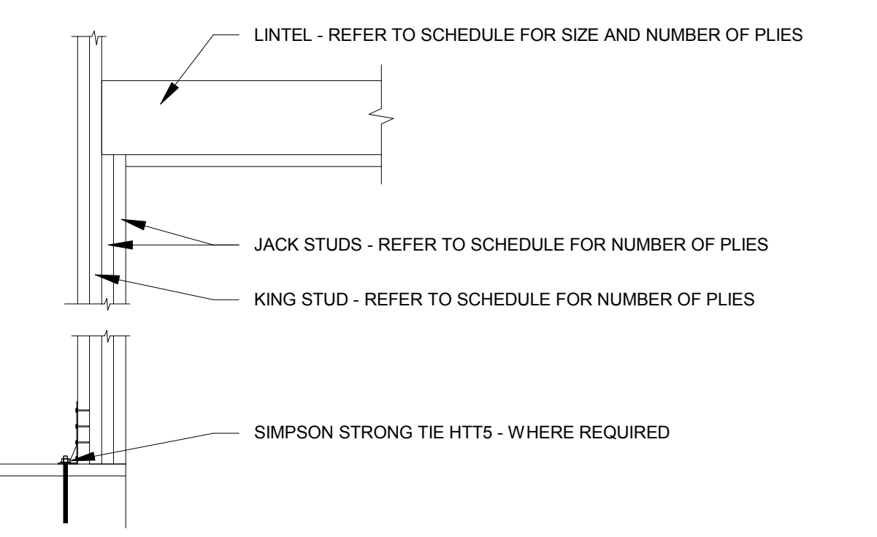
LINTEL - REFER TO SCHEDULE FOR SIZE AND NUMBER OF PLIES
JACK STUDS - REFER TO SCHEDULE FOR NUMBER OF PLIES
KING STUD - REFER TO SCHEDULE FOR NUMBER OF PLIES
SIMPSON STRONG TIE HTT5 - WHERE REQUIRED

TYPICAL LINTEL DETAIL

WIND COLUMN SCHEDULE

TAG	DESCRIPTION	BASE PLATE	TOP PLATE	ELEVATIONS
WC1	**W6x25 STEEL WIND COLUMN**	14"x7"x1/2" THICK STEEL PLATE - c/w (4) - 5/8"Ø EXPANSION ANCHORS. PROVIDE 6" (min.) EMBEDMENT	14"x6"x1/2" THICK STEEL PLATE	HEIGHT OF CONCRETE WALL: 5'-4" HEIGHT OF FRAMED WALL: 10'-0" LESS BASE PLATE: -1/2" LESS CAP PLATE: -1/2" LESS DOUBLE TOP PLATE: -3" **COLUMN HEIGHT: 15'-0"** **COLUMN ASSEMBLED HEIGHT: 15'-1"** **(CONTRACTOR TO VERIFY)**
WC2	**W6x25 STEEL WIND COLUMN**	14"x7"x1/2" THICK STEEL PLATE - c/w (4) - 5/8"Ø EXPANSION ANCHORS. PROVIDE 6" (min.) EMBEDMENT	14"x6"x1/2" THICK STEEL PLATE	HEIGHT OF CONCRETE WALL: 9'-4" HEIGHT OF FRAMED WALL: 10'-4 1/2" LESS BASE PLATE: -1/2" LESS CAP PLATE: -1/2" LESS DOUBLE TOP PLATE: -3" **COLUMN HEIGHT: 19'-4 1/2"** **COLUMN ASSEMBLED HEIGHT: 19'-5 1/2"** **(CONTRACTOR TO VERIFY)**

NORTH

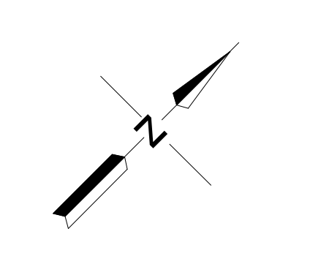

NOTES:

c/w	COMPLETE WITH
FDN	FOUNDATION
e/w	EACH WAY
EX.	EXISTING
H	HIGH/HORIZONTAL
max.	MAXIMUM
min.	MINIMUM
OBC	ONTARIO BUILDING CODE
o/c	ON CENTER
P.T.	PRESSURE TREATED
r/w	REINFORCED WITH
t/o	TOP OF
TYP.	TYPICAL
V	VERTICAL
W	WIDE
WWW	WELDED WIRE MESH

No.	REVISION DESCRIPTION	MM/DD/YY	CH'KD
1.	PRELIMINARY FOR DISCUSSION ONLY	05/07/25	TR
2.	REVISED FOR OWNER REVIEW	06/20/25	TR
3.	SITE PLAN - MINOR VARIANCE APPLICATION	07/10/25	TR
4.	ISSUED FOR APPROVAL	07/21/25	TR
5.	REVISED SITE PLAN	08/22/25	TR

VENTILATION DESIGN (30,192 LAYING HENS)

SUMMER:

EXHAUST FAN CAPACITY REQUIRED:	**275,500 CFM**	
EXHAUST FAN CAPACITY DESIGNED:	**8 x 54"Ø @ 29,100 CFM** = 232,800 CFM **8 x 24"Ø @ 6,240 CFM** = 49,920 CFM **6 x 18"Ø @ 3,450 CFM** = 20,700 CFM	
TOTAL EXHAUST FAN CAPACITY DESIGNED:	**303,420 CFM**	
INTAKE AREA REQUIRED:		551 ft²
INTAKE AREA DESIGNED (18" (min.) EFFECTIVE TRUSS OVERHANG) & (6" (min.) HEEL HEIGHT ABOVE INSULATION:		696ft²
INLET AREA REQUIRED:		551 ft²
INLET AREA DESIGNED: (13" (min.) SIDE WALL INLET BOTH SIDES):		442ft²
INLET AREA DESIGNED: (30 TPI DOUBLE CEILING INLETS 20-1/4" x 39-1/2"):		166ft²
		608ft²
AIR SPEED DESIGN: 500 ft/min		

WINTER:

EXHAUST FAN CAPACITY REQUIRED:	**9,060 CFM**	
EXHAUST FAN CAPACITY DESIGNED:	**6 x 18"Ø @ 3,450 CFM** = 20,700 CFM	
TOTAL EXHAUST FAN CAPACITY DESIGNED:	**20,700 CFM**	
INTAKE AREA REQUIRED:		20 ft²
INTAKE AREA DESIGNED (6" (min.) HEEL HEIGHT ABOVE INSULATION):		232ft²
INLET AREA REQUIRED:		20 ft²
INLET AREA DESIGNED (30 TPI DOUBLE CEILING INLETS 20-1/4" x 39-1/2"):		166 ft²
AIR SPEED DESIGN 1,000 ft/min		

VERIFY ALL MECHANICAL AND VENTILATION RATES / OPENINGS WITH EQUIPMENT SUPPLIER PRIOR TO CONSTRUCTION. CONTACT MR ENGINEERING AND DESIGN LTD. IF VENTILATION RATES / OPENINGS DIFFER THAN THOSE SHOWN ON THESE PLANS

EMERGENCY LIGHTING NOTES:

2.2.5.1. MINIMUM LIGHTING REQUIREMENTS

(1) WHERE LIGHTING IS PROVIDED IN A FARM BUILDING, EMERGENCY LIGHTING SHALL BE PROVIDED TO AN AVERAGE LEVEL OF ILLUMINATION NOT LESS THAN 10 lx AT FLOOR OR TREAD LEVEL IN:

(a) EXITS, AND

(b) PRINCIPAL ROUTES PROVIDING ACCESS TO EXIT IN OPEN FLOOR AREAS AND IN SERVICE ROOMS

(2) THE MINIMUM VALUE OF THE ILLUMINATION REQUIRED BY SENTENCE (1) SHALL BE 1 lx

(3) AN EMERGENCY POWER SUPPLY SHALL BE:

(a) PROVIDED TO MAINTAIN THE EMERGENCY LIGHTING REQUIRED BY SENTENCE (1) FROM A POWER SOURCE SUCH AS BATTERIES OR GENERATORS THAT WILL CONTINUE TO SUPPLY

(b) POWER IN THE EVENT THAT THE REGULAR POWER SUPPLY TO THE FARM BUILDING IS INTERRUPTED, AND

(c) DESIGNED AND INSTALLED SUCH THAT, UPON FAILURE OF THE REGULAR POWER, IT WILL ASSUME THE ELECTRICAL LOAD AUTOMATICALLY FOR A PERIOD OF 30 min.

FIRE PROTECTION NOTES:

2.2.4.3 PORTABLE FIRE EXTINGUISHERS

(1) PROVIDE PORTABLE FIRE EXTINGUISHERS IN CONFORMANCE WITH THE FIRE PROTECTION AND PREVENTION ACT, 1997.

2.2.1.12 FLAME-SPREAD RATING

(1) EXCEPT AS PROVIDED IN SENTENCES (2) AND (3), THE FLAME-SPREAD RATING OF INTERIOR WALL AND CEILING FINISHES, INCLUDING GLAZING AND SKYLIGHTS, SHALL NOT BE MORE THAN 150.

(2) THE FLAME-SPREAD RATING OF INTERIOR WALL AND CEILING FINISHES IN EXITS SHALL CONFORM TO SENTENCE 3.1.13.2.(1).

(3) SUBJECT TO THE REQUIREMENT OF ARTICLE 2.2.1.13., THE FLAME-SPREAD RATING ON ANY EXPOSED SURFACE OF FOAMED PLASTIC INSULATION AND ON ANY SURFACE THAT WOULD BE EXPOSED BY CUTTING THROUGH THE INSULATION IN ANY DIRECTION, SHALL BE NOT MORE THAN 500.

2.2.1.13. FOAMED PLASTICS

(1) FOAMED PLASTICS INSTALLED IN FARM BUILDINGS SHALL BE PROTECTED IN CONFORMANCE WITH SENTENCE 3.1.4.2.(1).

CONTRACTOR

LICENSED PROFESSIONAL ENGINEER
08/22/25
T. J. REGIER
100550036
PROVINCE OF ONTARIO

CONSULTANT

MR ENGINEERING AND DESIGN LTD.
CIVIL • COMMERCIAL • AGRICULTURAL
145 Thames Road, West, Unit 4
Exeter, ON, N0M 1S3
Telephone: (519)-317-0128
Email: admin@mrengdesign.com

BRENAIR FARMS INC.
LAYER BARN

7189 PARKHOUSE DRIVE
MELBOURNE, ON
N0L 1T0

GROUND FLOOR PLAN - SECTIONS & DETAILS

DESIGN	TR
DRAWN	TR
CHECKED	TR
APPROVED	TR
DATE	AUGUST 2025

PROJECT No.
MR25-027

SHEET No.
S-3

SCALE
As indicated

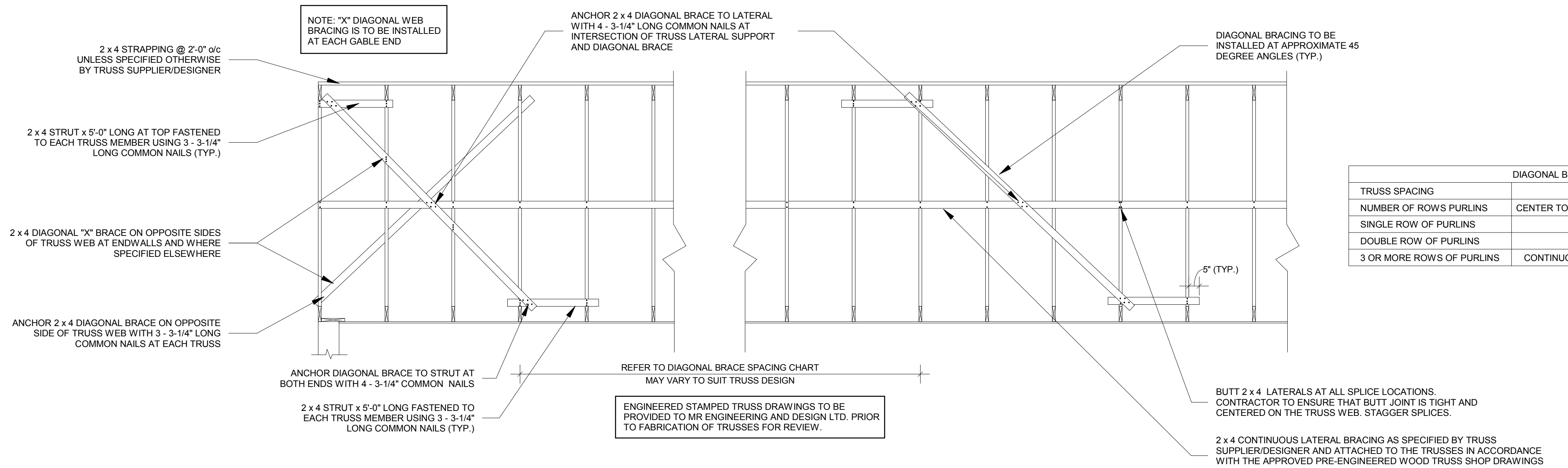
NOTE: "X" DIAGONAL WEB BRACING IS TO BE INSTALLED AT EACH GABLE END
2 x 4 STRAPPING @ 2'-0" o/c UNLESS SPECIFIED OTHERWISE BY TRUSS SUPPLIER/DESIGNER
2 x 4 STRUT x 5'-0" LONG AT TOP FASTENED TO EACH TRUSS MEMBER USING 3 - 3-1/4" LONG COMMON NAILS (TYP.)
2 x 4 DIAGONAL "X" BRACE ON OPPOSITE SIDES OF TRUSS WEB AT ENDWALLS AND WHERE SPECIFIED ELSEWHERE
ANCHOR 2 x 4 DIAGONAL BRACE ON OPPOSITE SIDE OF TRUSS WEB WITH 3 - 3-1/4" LONG COMMON NAILS AT EACH TRUSS
ANCHOR DIAGONAL BRACE TO STRUT AT BOTH ENDS WITH 4 - 3-1/4" COMMON NAILS
2 x 4 STRUT x 5'-0" LONG FASTENED TO EACH TRUSS MEMBER USING 3 - 3-1/4" LONG COMMON NAILS (TYP.)
ANCHOR 2 x 4 DIAGONAL BRACE TO LATERAL WITH 4 - 3-1/4" LONG COMMON NAILS AT INTERSECTION OF TRUSS LATERAL SUPPORT AND DIAGONAL BRACE
REFER TO DIAGONAL BRACE SPACING CHART
MAY VARY TO SUIT TRUSS DESIGN
ENGINEERED STAMPED TRUSS DRAWINGS TO BE PROVIDED TO MR ENGINEERING AND DESIGN LTD. PRIOR TO FABRICATION OF TRUSSES FOR REVIEW.
DIAGONAL BRACING TO BE INSTALLED AT APPROXIMATE 45 DEGREE ANGLES (TYP.)
5" (TYP.)
BUTT 2 x 4 LATERALS AT ALL SPLICE LOCATIONS. CONTRACTOR TO ENSURE THAT BUTT JOINT IS TIGHT AND CENTERED ON THE TRUSS WEB. STAGGER SPLICES.
2 x 4 CONTINUOUS LATERAL BRACING AS SPECIFIED BY TRUSS SUPPLIER/DESIGNER AND ATTACHED TO THE TRUSSES IN ACCORDANCE WITH THE APPROVED PRE-ENGINEERED WOOD TRUSS SHOP DRAWINGS (BY OTHERS)

② WEB BRACING DETAILS
1/4" = 1'-0"

DIAGONAL BRACE SPACING		
TRUSS SPACING	48" o/c	32" o/c
NUMBER OF ROWS PURLINS	CENTER TO CENTER SPACING	CENTER TO CENTER SPACING
SINGLE ROW OF PURLINS	48'-0"	32'-0"
DOUBLE ROW OF PURLINS	24'-0"	16'-0"
3 OR MORE ROWS OF PURLINS	CONTINUOUS "V" BRACING	CONTINUOUS "V" BRACING

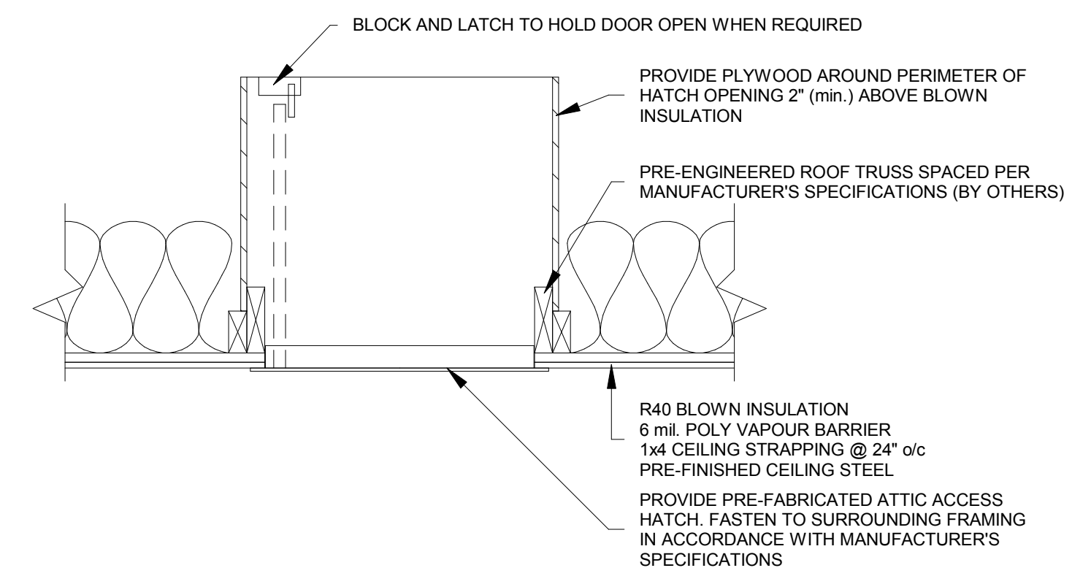
BLOCK AND LATCH TO HOLD DOOR OPEN WHEN REQUIRED
PROVIDE PLYWOOD AROUND PERIMETER OF HATCH OPENING 2" (min.) ABOVE BLOWN INSULATION
PRE-ENGINEERED ROOF TRUSS SPACED PER MANUFACTURER'S SPECIFICATIONS (BY OTHERS)
R40 BLOWN INSULATION
6 mil. POLY VAPOUR BARRIER
1x4 CEILING STRAPPING @ 24" o/c
PRE-FINISHED CEILING STEEL
PROVIDE PRE-FABRICATED ATTIC ACCESS HATCH. FASTEN TO SURROUNDING FRAMING IN ACCORDANCE WITH MANUFACTURER'S SPECIFICATIONS

③ ATTIC ACCESS DOOR
3/4" = 1'-0"

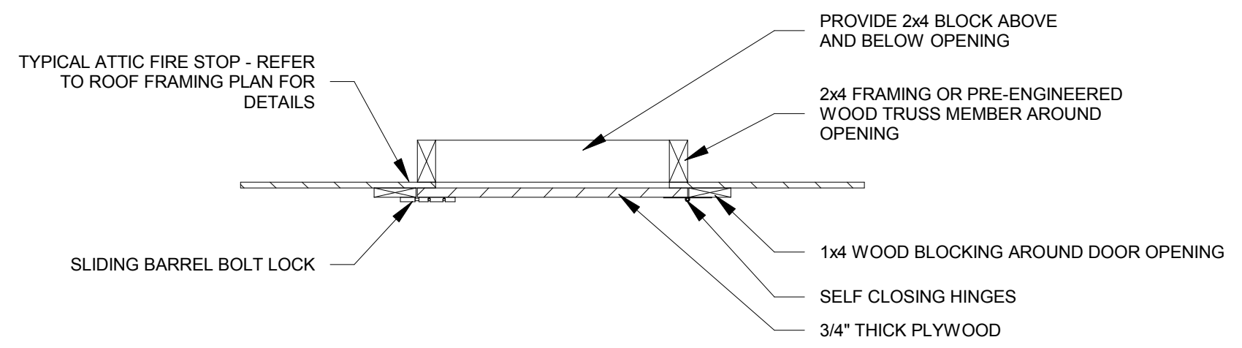
TYPICAL ATTIC FIRE STOP - REFER TO ROOF FRAMING PLAN FOR DETAILS
SLIDING BARREL BOLT LOCK
PROVIDE 2x4 BLOCK ABOVE AND BELOW OPENING
2x4 FRAMING OR PRE-ENGINEERED WOOD TRUSS MEMBER AROUND OPENING
1x4 WOOD BLOCKING AROUND DOOR OPENING
SELF CLOSING HINGES
3/4" THICK PLYWOOD

④ ATTIC ACCESS DOOR THROUGH FIRE STOPS
3/4" = 1'-0"

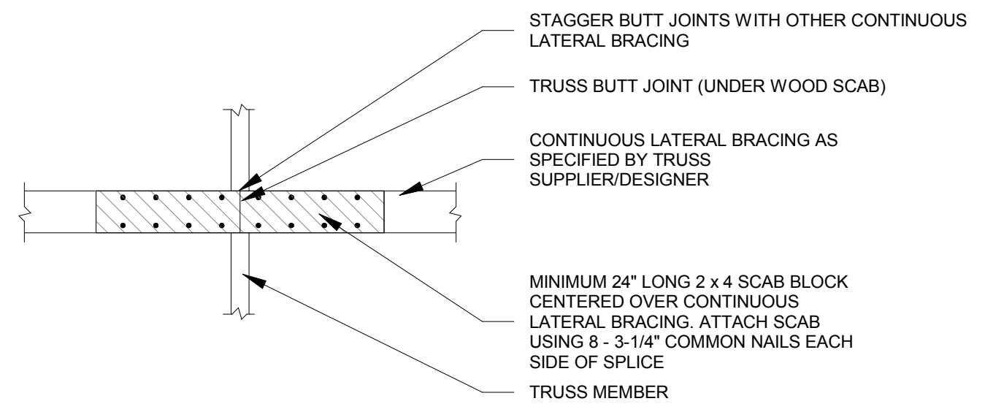
STAGGER BUTT JOINTS WITH OTHER CONTINUOUS LATERAL BRACING
TRUSS BUTT JOINT (UNDER WOOD SCAB)
CONTINUOUS LATERAL BRACING AS SPECIFIED BY TRUSS SUPPLIER/DESIGNER
MINIMUM 24" LONG 2 x 4 SCAB BLOCK CENTERED OVER CONTINUOUS LATERAL BRACING. ATTACH SCAB USING 8 - 3-1/4" COMMON NAILS EACH SIDE OF SPLICE
TRUSS MEMBER

⑤ TYPICAL BUTT JOINT SPLICE DETAIL
3/4" = 1'-0"

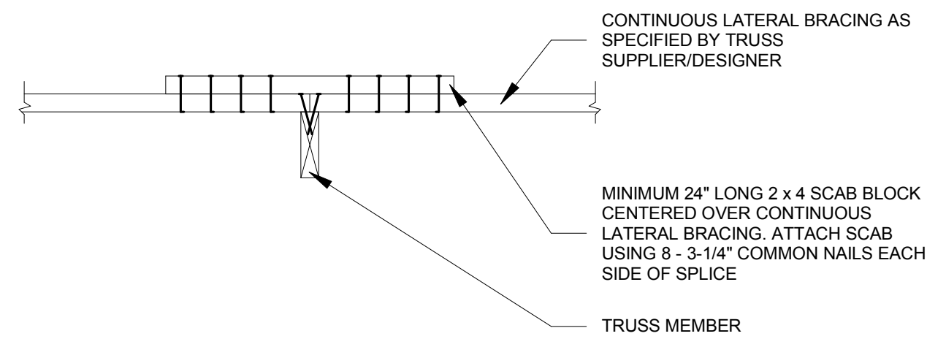
CONTINUOUS LATERAL BRACING AS SPECIFIED BY TRUSS SUPPLIER/DESIGNER
MINIMUM 24" LONG 2 x 4 SCAB BLOCK CENTERED OVER CONTINUOUS LATERAL BRACING. ATTACH SCAB USING 8 - 3-1/4" COMMON NAILS EACH SIDE OF SPLICE
TRUSS MEMBER

⑥ TYPICAL BUTT JOINT SPLICE SECTION
3/4" = 1'-0"

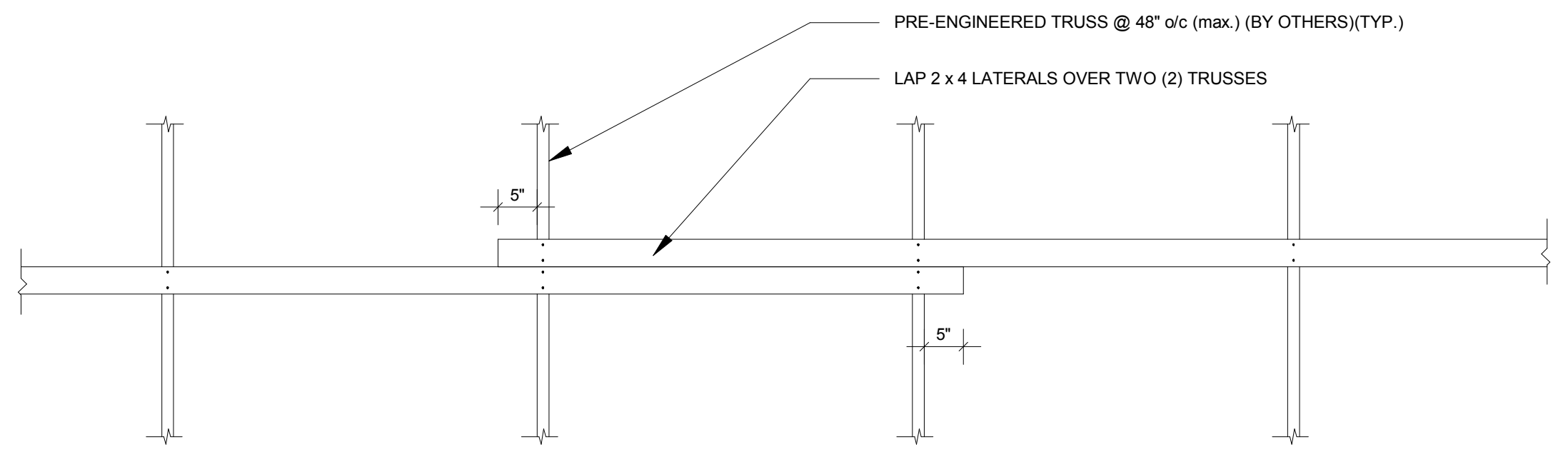
PRE-ENGINEERED TRUSS @ 48" o/c (max.) (BY OTHERS)(TYP.)
LAP 2 x 4 LATERALS OVER TWO (2) TRUSSES
5"
5"

⑦ ALTERNATIVE CONTINUOUS LATERAL BRACE SPLICE CONNECTION
1/2" = 1'-0"

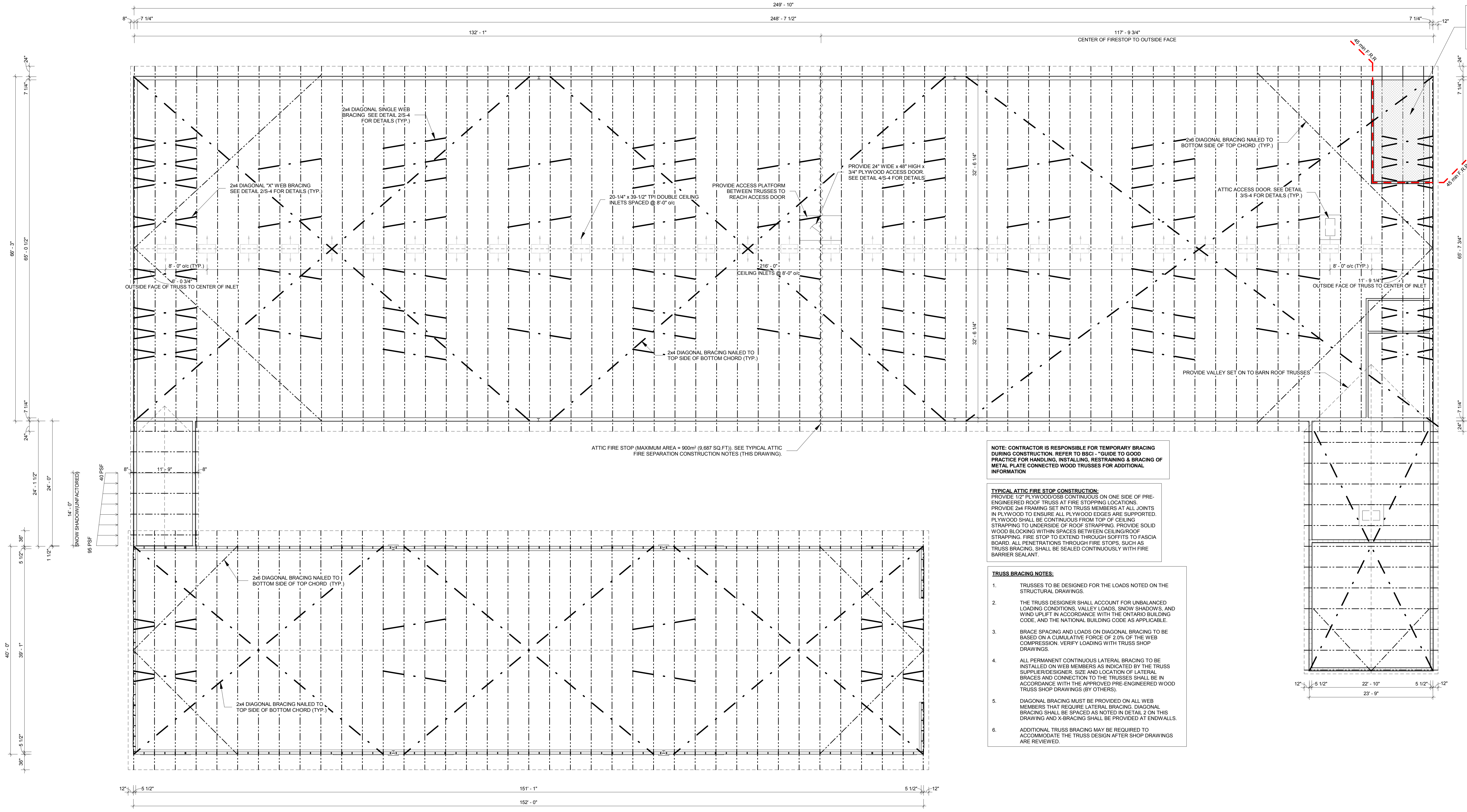
249' - 10"
8"
7 1/4"
248' - 7 1/2"
7 1/4"
12"
132' - 1"
117' - 9 3/4"
CENTER OF FIRESTOP TO OUTSIDE FACE
45 min F.R.R
45 min F.R.R
2x4 DIAGONAL SINGLE WEB BRACING SEE DETAIL 2/S-4 FOR DETAILS (TYP.)
2x4 DIAGONAL "X" WEB BRACING SEE DETAIL 2/S-4 FOR DETAILS (TYP.)
20-1/4" x 39-1/2" TPI DOUBLE CEILING INLETS SPACED @ 8'-0" o/c
PROVIDE ACCESS PLATFORM BETWEEN TRUSSES TO REACH ACCESS DOOR
PROVIDE 24" WIDE x 48" HIGH x 3/4" PLYWOOD ACCESS DOOR. SEE DETAIL 4/S-4 FOR DETAILS
2x6 DIAGONAL BRACING NAILED TO BOTTOM SIDE OF TOP CHORD (TYP.)
ATTIC ACCESS DOOR. SEE DETAIL 3/S-4 FOR DETAILS (TYP.)
8' - 0" o/c (TYP.)
6' - 0 3/4"
OUTSIDE FACE OF TRUSS TO CENTER OF INLET
216' - 0"
CEILING INLETS @ 8'-0" o/c
8' - 0" o/c (TYP.)
11' - 9 1/4"
OUTSIDE FACE OF TRUSS TO CENTER OF INLET
32' - 6 1/4"
32' - 6 1/4"
2x4 DIAGONAL BRACING NAILED TO TOP SIDE OF BOTTOM CHORD (TYP.)
2x4 DIAGONAL BRACING NAILED TO TOP SIDE OF BOTTOM CHORD (TYP.)
PROVIDE VALLEY SET ON TO BARN ROOF TRUSSES
24"
7 1/4"
65' - 7 3/4"
66' - 3"
7 1/4"
24"
ATTIC FIRE STOP (MAXIMUM AREA = 900m² (9,687 SQ.FT)). SEE TYPICAL ATTIC FIRE SEPARATION CONSTRUCTION NOTES (THIS DRAWING).
8"
11' - 9"
8"
40 PSF
14' - 0"
SNOW SHADOW(UNFACTORED)
95 PSF
24' - 1 1/2"
24' - 0"
36"
1 1/2"
5 1/2"
40' - 0"
39' - 1"
5 1/2"
36"
2x6 DIAGONAL BRACING NAILED TO BOTTOM SIDE OF TOP CHORD (TYP.)
2x4 DIAGONAL BRACING NAILED TO TOP SIDE OF BOTTOM CHORD (TYP.)
12"
5 1/2"
151' - 1"
5 1/2"
12"
152' - 0"
47' - 6 1/2"
48' - 0"
5 1/2"
8"
12"
5 1/2"
22' - 10"
5 1/2"
12"
23' - 9"

① ROOF FRAMING PLAN
3/32" = 1'-0"

CONSTRUCTION REQUIREMENTS FOR GENERATOR ROOM FIRE SEPARATION:
CEILING TO HAVE (2) LAYERS 5/8" TYPE 'X' INSTALLED TO 2x4 SPF No.1/No.2 CEILING STRAPPING SPACED NO GREATER THAN 24" o/c

EXHAUST GAS PRODUCED BY GENERATOR SHALL BE VENTED THROUGH EXTERIOR WALL AND SHALL BE LOCATED AS TO NOT BE RECIRCULATED INTO THE ROOM

NOTE: CONTRACTOR IS RESPONSIBLE FOR TEMPORARY BRACING DURING CONSTRUCTION. REFER TO BSCI - "GUIDE TO GOOD PRACTICE FOR HANDLING, INSTALLING, RESTRAINING & BRACING OF METAL PLATE CONNECTED WOOD TRUSSES FOR ADDITIONAL INFORMATION

TYPICAL ATTIC FIRE STOP CONSTRUCTION:
PROVIDE 1/2" PLYWOOD/OSB CONTINUOUS ON ONE SIDE OF PRE-ENGINEERED ROOF TRUSS AT FIRE STOPPING LOCATIONS. PROVIDE 2x4 FRAMING SET INTO TRUSS MEMBERS AT ALL JOINTS IN PLYWOOD TO ENSURE ALL PLYWOOD EDGES ARE SUPPORTED. PLYWOOD SHALL BE CONTINUOUS FROM TOP OF CEILING STRAPPING TO UNDERSIDE OF ROOF STRAPPING. PROVIDE SOLID WOOD BLOCKING WITHIN SPACES BETWEEN CEILING/ROOF STRAPPING. FIRE STOP TO EXTEND THROUGH SOFFITS TO FASCIA BOARD. ALL PENETRATIONS THROUGH FIRE STOPS, SUCH AS TRUSS BRACING, SHALL BE SEALED CONTINUOUSLY WITH FIRE BARRIER SEALANT.

TRUSS BRACING NOTES:

1. TRUSSES TO BE DESIGNED FOR THE LOADS NOTED ON THE STRUCTURAL DRAWINGS.
2. THE TRUSS DESIGNER SHALL ACCOUNT FOR UNBALANCED LOADING CONDITIONS, VALLEY LOADS, SNOW SHADOWS, AND WIND UPLIFT IN ACCORDANCE WITH THE ONTARIO BUILDING CODE, AND THE NATIONAL BUILDING CODE AS APPLICABLE.
3. BRACE SPACING AND LOADS ON DIAGONAL BRACING TO BE BASED ON A CUMULATIVE FORCE OF 2.0% OF THE WEB COMPRESSION. VERIFY LOADING WITH TRUSS SHOP DRAWINGS.
4. ALL PERMANENT CONTINUOUS LATERAL BRACING TO BE INSTALLED ON WEB MEMBERS AS INDICATED BY THE TRUSS SUPPLIER/DESIGNER. SIZE AND LOCATION OF LATERAL BRACES AND CONNECTION TO THE TRUSSES SHALL BE IN ACCORDANCE WITH THE APPROVED PRE-ENGINEERED WOOD TRUSS SHOP DRAWINGS (BY OTHERS).
5. DIAGONAL BRACING MUST BE PROVIDED ON ALL WEB MEMBERS THAT REQUIRE LATERAL BRACING. DIAGONAL BRACING SHALL BE SPACED AS NOTED IN DETAIL 2 ON THIS DRAWING AND X-BRACING SHALL BE PROVIDED AT ENDWALLS.
6. ADDITIONAL TRUSS BRACING MAY BE REQUIRED TO ACCOMMODATE THE TRUSS DESIGN AFTER SHOP DRAWINGS ARE REVIEWED.

NORTH

NOTES:

c/w	COMPLETE WITH
FDN	FOUNDATION
e/w	EACH WAY
EX.	EXISTING
H	HIGH/HORIZONTAL
max.	MAXIMUM
min.	MINIMUM
OBC	ONTARIO BUILDING CODE
o/c	ON CENTER
P.T.	PRESSURE TREATED
r/w	REINFORCED WITH
t/o	TOP OF
TYP.	TYPICAL
V	VERTICAL
W	WIDE
WWW	WELDED WIRE MESH

No.	REVISION DESCRIPTION	MM/DD/YY	CH'KD
1.	PRELIMINARY FOR DISCUSSION ONLY	05/07/25	TR
2.	REVISED FOR OWNER REVIEW	06/20/25	TR
3.	SITE PLAN - MINOR VARIANCE APPLICATION	07/10/25	TR
4.	ISSUED FOR APPROVAL	07/21/25	TR
5.	REVISED SITE PLAN	08/22/25	TR

CONTRACTOR

LICENSED PROFESSIONAL ENGINEER
08/22/25
T. J. REGIER
100550036
PROVINCE OF ONTARIO

CONSULTANT

MR ENGINEERING AND DESIGN LTD.
CIVIL•COMMERCIAL•AGRICULTURAL

145 Thames Road, West, Unit 4
Exeter, ON, N0M 1S3
Telephone: (519)-317-0128
Email: admin@mrengdesign.com

BRENAIR FARMS INC.
LAYER BARN

7189 PARKHOUSE DRIVE
MELBOURNE, ON
N0L 1T0

ROOF FRAMING PLAN - SECTIONS & DETAILS

DESIGN	**TR**
DRAWN	**TR**
CHECKED	**TR**
APPROVED	**TR**
DATE	**AUGUST 2025**

PROJECT No.
MR25-027

SHEET No.
S-4

SCALE
As indicated

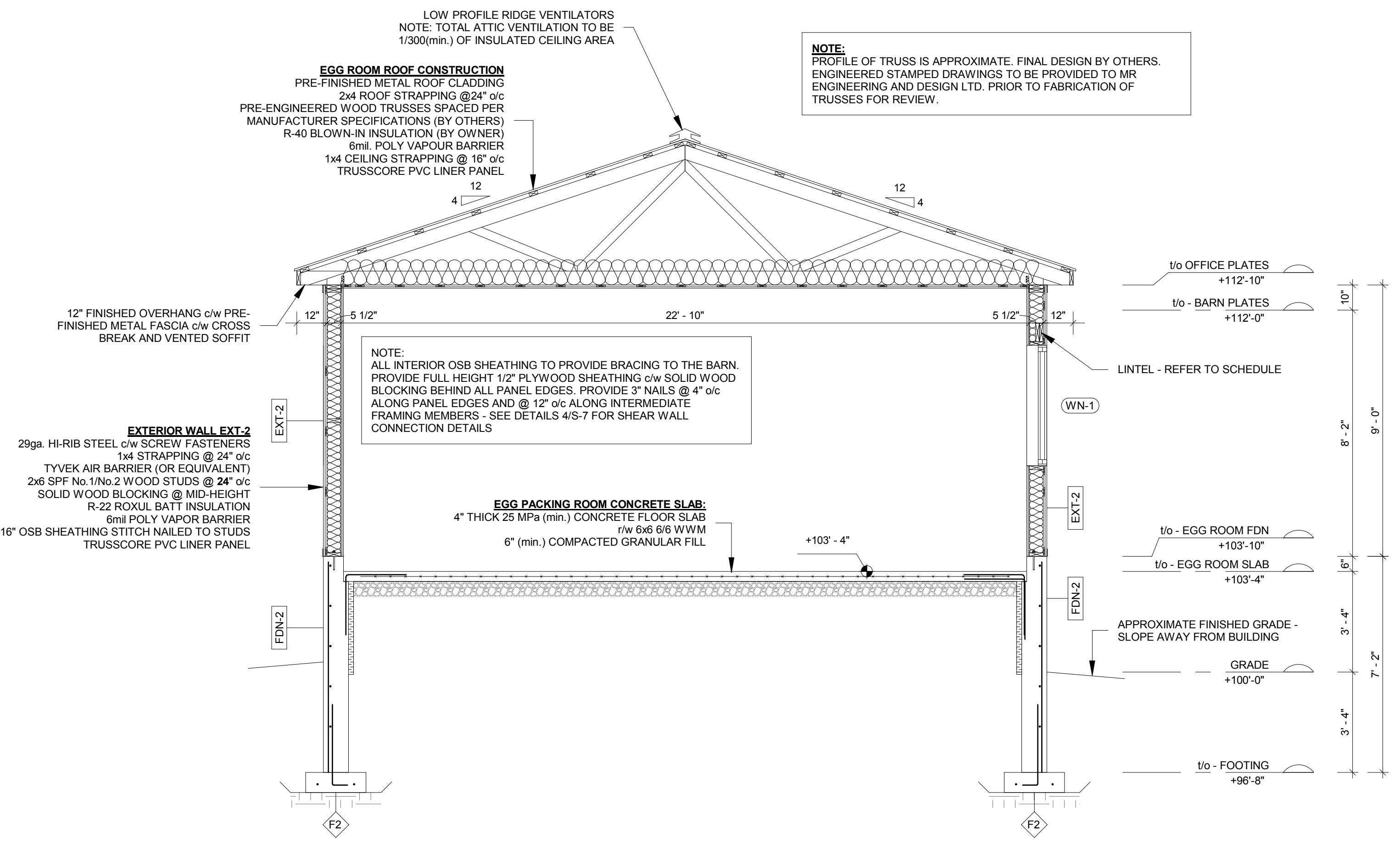

LOW PROFILE RIDGE VENTILATORS
NOTE: TOTAL ATTIC VENTILATION TO BE 1/300(min.) OF INSULATED CEILING AREA

EGG ROOM ROOF CONSTRUCTION
PRE-FINISHED METAL ROOF CLADDING
2x4 ROOF STRAPPING @24" o/c
PRE-ENGINEERED WOOD TRUSSES SPACED PER MANUFACTURER SPECIFICATIONS (BY OTHERS)
R-40 BLOWN-IN INSULATION (BY OWNER)
6mil. POLY VAPOUR BARRIER
1x4 CEILING STRAPPING @ 16" o/c
TRUSSCORE PVC LINER PANEL

NOTE:
PROFILE OF TRUSS IS APPROXIMATE. FINAL DESIGN BY OTHERS. ENGINEERED STAMPED DRAWINGS TO BE PROVIDED TO MR ENGINEERING AND DESIGN LTD. PRIOR TO FABRICATION OF TRUSSES FOR REVIEW.

12" FINISHED OVERHANG c/w PRE-FINISHED METAL FASCIA c/w CROSS BREAK AND VENTED SOFFIT

NOTE:
ALL INTERIOR OSB SHEATHING TO PROVIDE BRACING TO THE BARN. PROVIDE FULL HEIGHT 1/2" PLYWOOD SHEATHING c/w SOLID WOOD BLOCKING BEHIND ALL PANEL EDGES. PROVIDE 3" NAILS @ 4" o/c ALONG PANEL EDGES AND @ 12" o/c ALONG INTERMEDIATE FRAMING MEMBERS - SEE DETAILS 4/S-7 FOR SHEAR WALL CONNECTION DETAILS

EXTERIOR WALL EXT-2
29ga. HI-RIB STEEL c/w SCREW FASTENERS
1x4 STRAPPING @ 24" o/c
TYVEK AIR BARRIER (OR EQUIVALENT)
2x6 SPF No.1/No.2 WOOD STUDS @ **24**" o/c
SOLID WOOD BLOCKING @ MID-HEIGHT
R-22 ROXUL BATT INSULATION
6mil POLY VAPOR BARRIER
7/16" OSB SHEATHING STITCH NAILED TO STUDS
TRUSSCORE PVC LINER PANEL

EGG PACKING ROOM CONCRETE SLAB:
4" THICK 25 MPa (min.) CONCRETE FLOOR SLAB
r/w 6x6 6/6 WWM
6" (min.) COMPACTED GRANULAR FILL

LINTEL - REFER TO SCHEDULE

APPROXIMATE FINISHED GRADE - SLOPE AWAY FROM BUILDING

12
4
12"
5 1/2"
22' - 10"
5 1/2"
12"
EXT-2
FDN-2
WN-1
+103' - 4"
t/o OFFICE PLATES
+112'-10"
t/o - BARN PLATES
+112'-0"
t/o - EGG ROOM FDN
+103'-10"
t/o - EGG ROOM SLAB
+103'-4"
GRADE
+100'-0"
t/o - FOOTING
+96'-8"
10"
8' - 2"
9' - 0"
6"
3' - 4"
7' - 2"
3' - 4"
F2
F2

① TYPICAL SECTION EGG PACKING ROOM
1/4" = 1'-0"

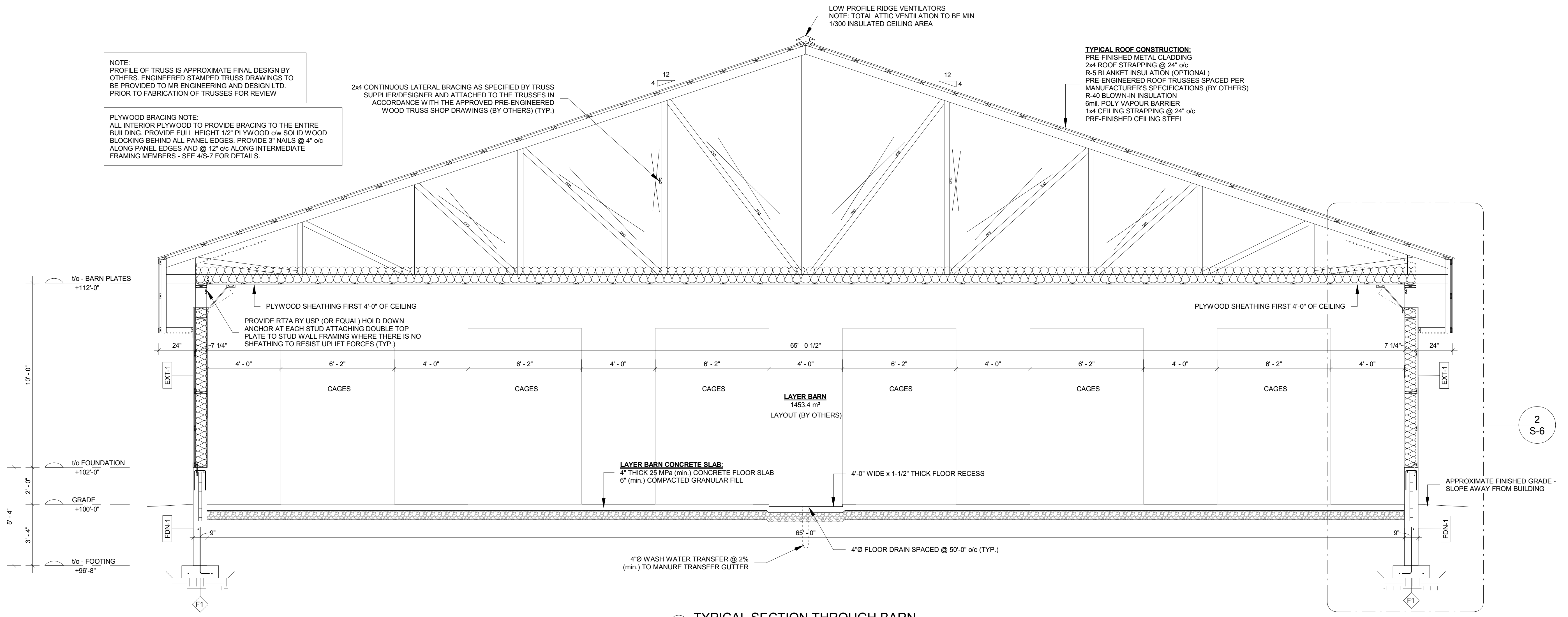

NOTE:
PROFILE OF TRUSS IS APPROXIMATE FINAL DESIGN BY OTHERS. ENGINEERED STAMPED TRUSS DRAWINGS TO BE PROVIDED TO MR ENGINEERING AND DESIGN LTD. PRIOR TO FABRICATION OF TRUSSES FOR REVIEW

PLYWOOD BRACING NOTE:
ALL INTERIOR PLYWOOD TO PROVIDE BRACING TO THE ENTIRE BUILDING. PROVIDE FULL HEIGHT 1/2" PLYWOOD c/w SOLID WOOD BLOCKING BEHIND ALL PANEL EDGES. PROVIDE 3" NAILS @ 4" o/c ALONG PANEL EDGES AND @ 12" o/c ALONG INTERMEDIATE FRAMING MEMBERS - SEE 4/S-7 FOR DETAILS.

2x4 CONTINUOUS LATERAL BRACING AS SPECIFIED BY TRUSS SUPPLIER/DESIGNER AND ATTACHED TO THE TRUSSES IN ACCORDANCE WITH THE APPROVED PRE-ENGINEERED WOOD TRUSS SHOP DRAWINGS (BY OTHERS) (TYP.)

LOW PROFILE RIDGE VENTILATORS
NOTE: TOTAL ATTIC VENTILATION TO BE MIN 1/300 INSULATED CEILING AREA

TYPICAL ROOF CONSTRUCTION:
PRE-FINISHED METAL CLADDING
2x4 ROOF STRAPPING @ 24" o/c
R-5 BLANKET INSULATION (OPTIONAL)
PRE-ENGINEERED ROOF TRUSSES SPACED PER MANUFACTURER'S SPECIFICATIONS (BY OTHERS)
R-40 BLOWN-IN INSULATION
6mil. POLY VAPOUR BARRIER
1x4 CEILING STRAPPING @ 24" o/c
PRE-FINISHED CEILING STEEL

PLYWOOD SHEATHING FIRST 4'-0" OF CEILING

PROVIDE RT7A BY USP (OR EQUAL) HOLD DOWN ANCHOR AT EACH STUD ATTACHING DOUBLE TOP PLATE TO STUD WALL FRAMING WHERE THERE IS NO SHEATHING TO RESIST UPLIFT FORCES (TYP.)

LAYER BARN CONCRETE SLAB:
4" THICK 25 MPa (min.) CONCRETE FLOOR SLAB
6" (min.) COMPACTED GRANULAR FILL

4'-0" WIDE x 1-1/2" THICK FLOOR RECESS

4"Ø WASH WATER TRANSFER @ 2% (min.) TO MANURE TRANSFER GUTTER

4"Ø FLOOR DRAIN SPACED @ 50'-0" o/c (TYP.)

APPROXIMATE FINISHED GRADE - SLOPE AWAY FROM BUILDING

12
4
12
4
PLYWOOD SHEATHING FIRST 4'-0" OF CEILING
24"
7 1/4"
65' - 0 1/2"
7 1/4"
24"
4' - 0"
6' - 2"
4' - 0"
6' - 2"
4' - 0"
6' - 2"
4' - 0"
6' - 2"
4' - 0"
6' - 2"
4' - 0"
6' - 2"
4' - 0"
CAGES
CAGES
CAGES
LAYER BARN
1453.4 m²
LAYOUT (BY OTHERS)
CAGES
CAGES
CAGES
EXT-1
EXT-1
FDN-1
FDN-1
9"
65' - 0"
9"
t/o - BARN PLATES
+112'-0"
t/o FOUNDATION
+102'-0"
GRADE
+100'-0"
t/o - FOOTING
+96'-8"
10' - 0"
2' - 0"
5' - 4"
3' - 4"
2
S-6
F1
F1

② TYPICAL SECTION THROUGH BARN
1/4" = 1'-0"

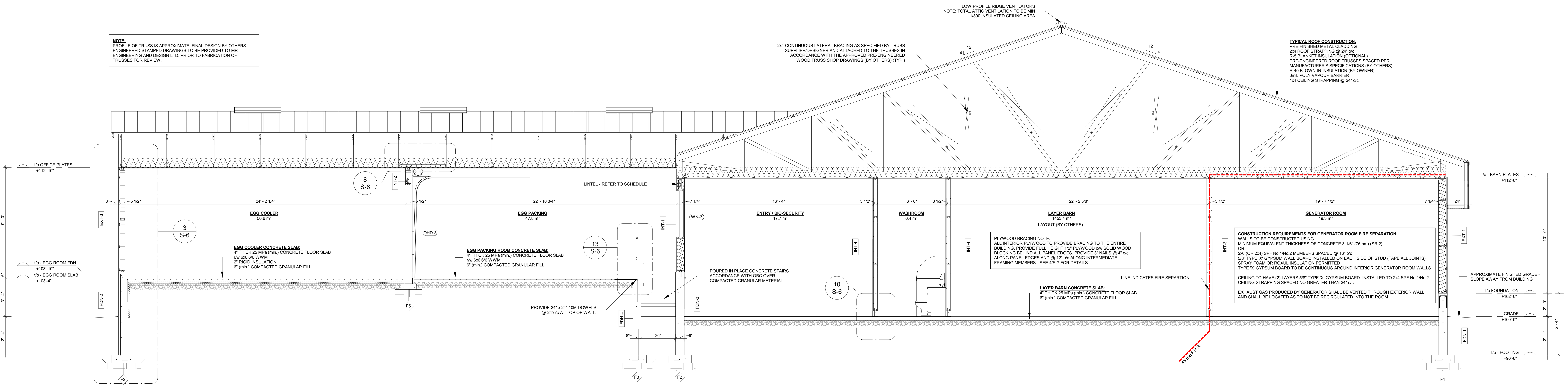

NOTE:
PROFILE OF TRUSS IS APPROXIMATE. FINAL DESIGN BY OTHERS. ENGINEERED STAMPED DRAWINGS TO BE PROVIDED TO MR ENGINEERING AND DESIGN LTD. PRIOR TO FABRICATION OF TRUSSES FOR REVIEW.

LOW PROFILE RIDGE VENTILATORS
NOTE: TOTAL ATTIC VENTILATION TO BE MIN 1/300 INSULATED CEILING AREA

2x4 CONTINUOUS LATERAL BRACING AS SPECIFIED BY TRUSS SUPPLIER/DESIGNER AND ATTACHED TO THE TRUSSES IN ACCORDANCE WITH THE APPROVED PRE-ENGINEERED WOOD TRUSS SHOP DRAWINGS (BY OTHERS) (TYP.)

TYPICAL ROOF CONSTRUCTION:
PRE-FINISHED METAL CLADDING
2x4 ROOF STRAPPING @ 24" o/c
R-5 BLANKET INSULATION (OPTIONAL)
PRE-ENGINEERED ROOF TRUSSES SPACED PER MANUFACTURER'S SPECIFICATIONS (BY OTHERS)
R-40 BLOWN-IN INSULATION (BY OWNER)
6mil. POLY VAPOUR BARRIER
1x4 CEILING STRAPPING @ 24" o/c

LINTEL - REFER TO SCHEDULE

EGG COOLER CONCRETE SLAB:
4" THICK 25 MPa (min.) CONCRETE FLOOR SLAB
r/w 6x6 6/6 WWM
2" RIGID INSULATION
6" (min.) COMPACTED GRANULAR FILL

EGG PACKING ROOM CONCRETE SLAB:
4" THICK 25 MPa (min.) CONCRETE FLOOR SLAB
r/w 6x6 6/6 WWM
6" (min.) COMPACTED GRANULAR FILL

POURED IN PLACE CONCRETE STAIRS ACCORDANCE WITH OBC OVER COMPACTED GRANULAR MATERIAL

PROVIDE 24" x 24" 10M DOWELS @ 24"o/c AT TOP OF WALL.

PLYWOOD BRACING NOTE:
ALL INTERIOR PLYWOOD TO PROVIDE BRACING TO THE ENTIRE BUILDING. PROVIDE FULL HEIGHT 1/2" PLYWOOD c/w SOLID WOOD BLOCKING BEHIND ALL PANEL EDGES. PROVIDE 3" NAILS @ 4" o/c ALONG PANEL EDGES AND @ 12" o/c ALONG INTERMEDIATE FRAMING MEMBERS - SEE 4/S-7 FOR DETAILS.

LAYER BARN CONCRETE SLAB:
4" THICK 25 MPa (min.) CONCRETE FLOOR SLAB
6" (min.) COMPACTED GRANULAR FILL

LINE INDICATES FIRE SEPARTION

CONSTRUCTION REQUIREMENTS FOR GENERATOR ROOM FIRE SEPARATION:
WALLS TO BE CONSTRUCTED USING
MINIMUM EQUIVALENT THICKNESS OF CONCRETE 3-1/6" (76mm) (SB-2)
OR
2x6 (OR 2x4) SPF No.1/No.2 MEMBERS SPACED @ 16" o/c
5/8" TYPE 'X' GYPSUM WALL BOARD INSTALLED ON EACH SIDE OF STUD (TAPE ALL JOINTS)
SPRAY FOAM OR ROXUL INSULATION PERMITTED
TYPE 'X' GYPSUM BOARD TO BE CONTINUOUS AROUND INTERIOR GENERATOR ROOM WALLS

CEILING TO HAVE (2) LAYERS 5/8" TYPE 'X' GYPSUM BOARD INSTALLED TO 2x4 SPF No.1/No.2 CEILING STRAPPING SPACED NO GREATER THAN 24" o/c

EXHAUST GAS PRODUCED BY GENERATOR SHALL BE VENTED THROUGH EXTERIOR WALL AND SHALL BE LOCATED AS TO NOT BE RECIRCULATED INTO THE ROOM

APPROXIMATE FINISHED GRADE - SLOPE AWAY FROM BUILDING

12
4
12
4
t/o OFFICE PLATES
+112'-10"
t/o - EGG ROOM FDN
+103'-10"
t/o - EGG ROOM SLAB
+103'-4"
9' - 0"
6"
3' - 4"
7' - 2"
3' - 4"
8"
5 1/2"
24' - 2 1/4"
5 1/2"
22' - 10 3/4"
7 1/4"
16' - 4"
3 1/2"
6' - 0"
3 1/2"
22' - 2 5/8"
3 1/2"
19' - 7 1/2"
7 1/4"
24"
EGG COOLER
50.6 m²
EGG PACKING
47.8 m²
ENTRY / BIO-SECURITY
17.7 m²
WASHROOM
6.4 m²
LAYER BARN
1453.4 m²
LAYOUT (BY OTHERS)
GENERATOR ROOM
19.3 m²
EXT-3
FDN-2
INT-2
OHD-3
INT-1
WN-3
FDN-4
FDN-3
INT-4
INT-4
INT-3
EXT-1
FDN-1
8
S-6
3
S-6
13
S-6
10
S-6
8"
36"
9"
F2
F5
F3
F2
F1
45 min F.R.R
t/o - BARN PLATES
+112'-0"
t/o FOUNDATION
+102'-0"
GRADE
+100'-0"
t/o - FOOTING
+96'-8"
10' - 0"
2' - 0"
5' - 4"
3' - 4"

③ SECTION THROUGH EGG ROOM AND LAYER BARN
1/4" = 1'-0"

NORTH

NOTES:
c/w COMPLETE WITH
FDN FOUNDATION
e/w EACH WAY
EX. EXISTING
H HIGH/HORIZONTAL
max. MAXIMUM
min. MINIMUM
OBC ONTARIO BUILDING CODE
o/c ON CENTER
P.T. PRESSURE TREATED
r/w REINFORCED WITH
t/o TOP OF
TYP. TYPICAL
V VERTICAL
W WIDE
WWW WELDED WIRE MESH

No.	REVISION DESCRIPTION	MM/DD/YY	CH'KD
1.	PRELIMINARY FOR DISCUSSION ONLY	05/07/25	TR
2.	REVISED FOR OWNER REVIEW	06/20/25	TR
3.	SITE PLAN - MINOR VARIANCE APPLICATION	07/10/25	TR
4.	ISSUED FOR APPROVAL	07/21/25	TR
5.	REVISED SITE PLAN	08/22/25	TR

CONTRACTOR

08/22/25
T. J. REGIER
100550036

CONSULTANT

MR ENGINEERING AND DESIGN LTD.
CIVIL • COMMERCIAL • AGRICULTURAL

145 Thames Road, West, Unit 4
Exeter, ON, N0M 1S3
Telephone: (519)-317-0128
Email: admin@mrengdesign.com

BRENAIR FARMS INC.
LAYER BARN

7189 PARKHOUSE DRIVE
MELBOURNE, ON
N0L 1T0

SECTIONS & DETAILS

PROJECT No.
MR25-027

SHEET No.
S-5

SCALE
1/4" = 1'-0"

DESIGN	TR
DRAWN	TR
CHECKED	TR
APPROVED	TR
DATE	AUGUST 2025

NOTE:
PROFILE OF TRUSS IS APPROXIMATE FINAL DESIGN BY OTHERS. ENGINEERED STAMPED TRUSS DRAWINGS TO BE PROVIDED TO MR ENGINEERING AND DESIGN LTD. PRIOR TO FABRICATION OF TRUSSES FOR REVIEW

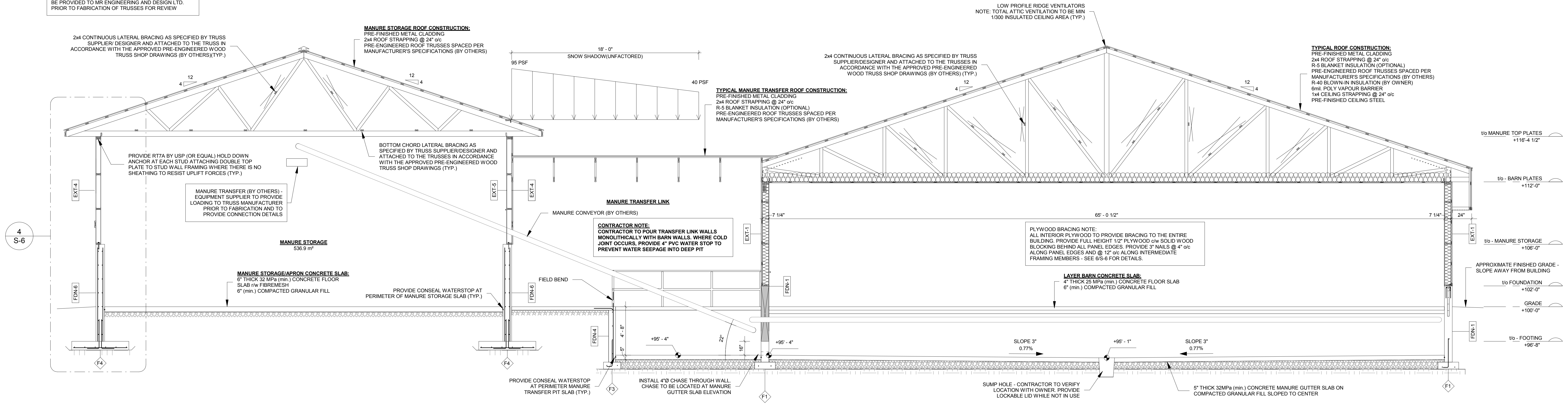
2x4 CONTINUOUS LATERAL BRACING AS SPECIFIED BY TRUSS SUPPLIER/ DESIGNER AND ATTACHED TO THE TRUSS IN ACCORDANCE WITH THE APPROVED PRE-ENGINEERED WOOD TRUSS SHOP DRAWINGS (BY OTHERS)(TYP.)
12
4
PROVIDE RT7A BY USP (OR EQUAL) HOLD DOWN ANCHOR AT EACH STUD ATTACHING DOUBLE TOP PLATE TO STUD WALL FRAMING WHERE THERE IS NO SHEATHING TO RESIST UPLIFT FORCES (TYP.)
BOTTOM CHORD LATERAL BRACING AS SPECIFIED BY TRUSS SUPPLIER/DESIGNER AND ATTACHED TO THE TRUSSES IN ACCORDANCE WITH THE APPROVED PRE-ENGINEERED WOOD TRUSS SHOP DRAWINGS (TYP.)
MANURE TRANSFER (BY OTHERS) - EQUIPMENT SUPPLIER TO PROVIDE LOADING TO TRUSS MANUFACTURER PRIOR TO FABRICATION AND TO PROVIDE CONNECTION DETAILS
4
S-6
EXT-4
EXT-5
FDN-6
F4
MANURE STORAGE
536.9 m²
PROVIDE CONSEAL WATERSTOP AT PERIMETER OF MANURE STORAGE SLAB (TYP.)
FIELD BEND
18' - 0"
SNOW SHADOW(UNFACTORED)
95 PSF
40 PSF
MANURE TRANSFER LINK
MANURE CONVEYOR (BY OTHERS)
EXT-1
FDN-1
FDN-4
4' - 8"
5"
+95' - 4"
22°
16"
+95' - 4"
PROVIDE CONSEAL WATERSTOP AT PERIMETER MANURE TRANSFER PIT SLAB (TYP.)
F3
INSTALL 4"Ø CHASE THROUGH WALL. CHASE TO BE LOCATED AT MANURE GUTTER SLAB ELEVATION
F1
LOW PROFILE RIDGE VENTILATORS
NOTE: TOTAL ATTIC VENTILATION TO BE MIN 1/300 INSULATED CEILING AREA (TYP.)
2x4 CONTINUOUS LATERAL BRACING AS SPECIFIED BY TRUSS SUPPLIER/DESIGNER AND ATTACHED TO THE TRUSSES IN ACCORDANCE WITH THE APPROVED PRE-ENGINEERED WOOD TRUSS SHOP DRAWINGS (BY OTHERS) (TYP.)
7 1/4"
65' - 0 1/2"
7 1/4"
24"
SLOPE 3"
0.77%
+95' - 1"
SLOPE 3"
0.77%
SUMP HOLE - CONTRACTOR TO VERIFY LOCATION WITH OWNER. PROVIDE LOCKABLE LID WHILE NOT IN USE
5" THICK 32MPa (min.) CONCRETE MANURE GUTTER SLAB ON COMPACTED GRANULAR FILL SLOPED TO CENTER
t/o MANURE TOP PLATES +116'-4 1/2"
t/o - BARN PLATES +112'-0"
t/o - MANURE STORAGE +106'-0"
APPROXIMATE FINISHED GRADE - SLOPE AWAY FROM BUILDING
t/o FOUNDATION +102'-0"
GRADE +100'-0"
t/o - FOOTING +96'-8"
4' - 4 1/2"
6' - 0"
4' - 0"
2' - 0"
3' - 4"

MANURE STORAGE ROOF CONSTRUCTION:
PRE-FINISHED METAL CLADDING
2x4 ROOF STRAPPING @ 24" o/c
PRE-ENGINEERED ROOF TRUSSES SPACED PER MANUFACTURER'S SPECIFICATIONS (BY OTHERS)

MANURE STORAGE/APRON CONCRETE SLAB:
6" THICK 32 MPa (min.) CONCRETE FLOOR SLAB r/w FIBREMESH
6" (min.) COMPACTED GRANULAR FILL

TYPICAL MANURE TRANSFER ROOF CONSTRUCTION:
PRE-FINISHED METAL CLADDING
2x4 ROOF STRAPPING @ 24" o/c
R-5 BLANKET INSULATION (OPTIONAL)
PRE-ENGINEERED ROOF TRUSSES SPACED PER MANUFACTURER'S SPECIFICATIONS (BY OTHERS)

CONTRACTOR NOTE:
CONTRACTOR TO POUR TRANSFER LINK WALLS MONOLITHICALLY WITH BARN WALLS. WHERE COLD JOINT OCCURS, PROVIDE 4" PVC WATER STOP TO PREVENT WATER SEEPAGE INTO DEEP PIT

TYPICAL ROOF CONSTRUCTION:
PRE-FINISHED METAL CLADDING
2x4 ROOF STRAPPING @ 24" o/c
R-5 BLANKET INSULATION (OPTIONAL)
PRE-ENGINEERED ROOF TRUSSES SPACED PER MANUFACTURER'S SPECIFICATIONS (BY OTHERS)
R-40 BLOWN-IN INSULATION (BY OWNER)
6mil. POLY VAPOUR BARRIER
1x4 CEILING STRAPPING @ 24" o/c
PRE-FINISHED CEILING STEEL

PLYWOOD BRACING NOTE:
ALL INTERIOR PLYWOOD TO PROVIDE BRACING TO THE ENTIRE BUILDING. PROVIDE FULL HEIGHT 1/2" PLYWOOD c/w SOLID WOOD BLOCKING BEHIND ALL PANEL EDGES. PROVIDE 3" NAILS @ 4" o/c ALONG PANEL EDGES AND @ 12" o/c ALONG INTERMEDIATE FRAMING MEMBERS - SEE 6/S-6 FOR DETAILS.

LAYER BARN CONCRETE SLAB:
4" THICK 25 MPa (min.) CONCRETE FLOOR SLAB
6" (min.) COMPACTED GRANULAR FILL

1 TYPICAL SECTION THROUGH BARN AND MANURE STORAGE
3/16" = 1'-0"

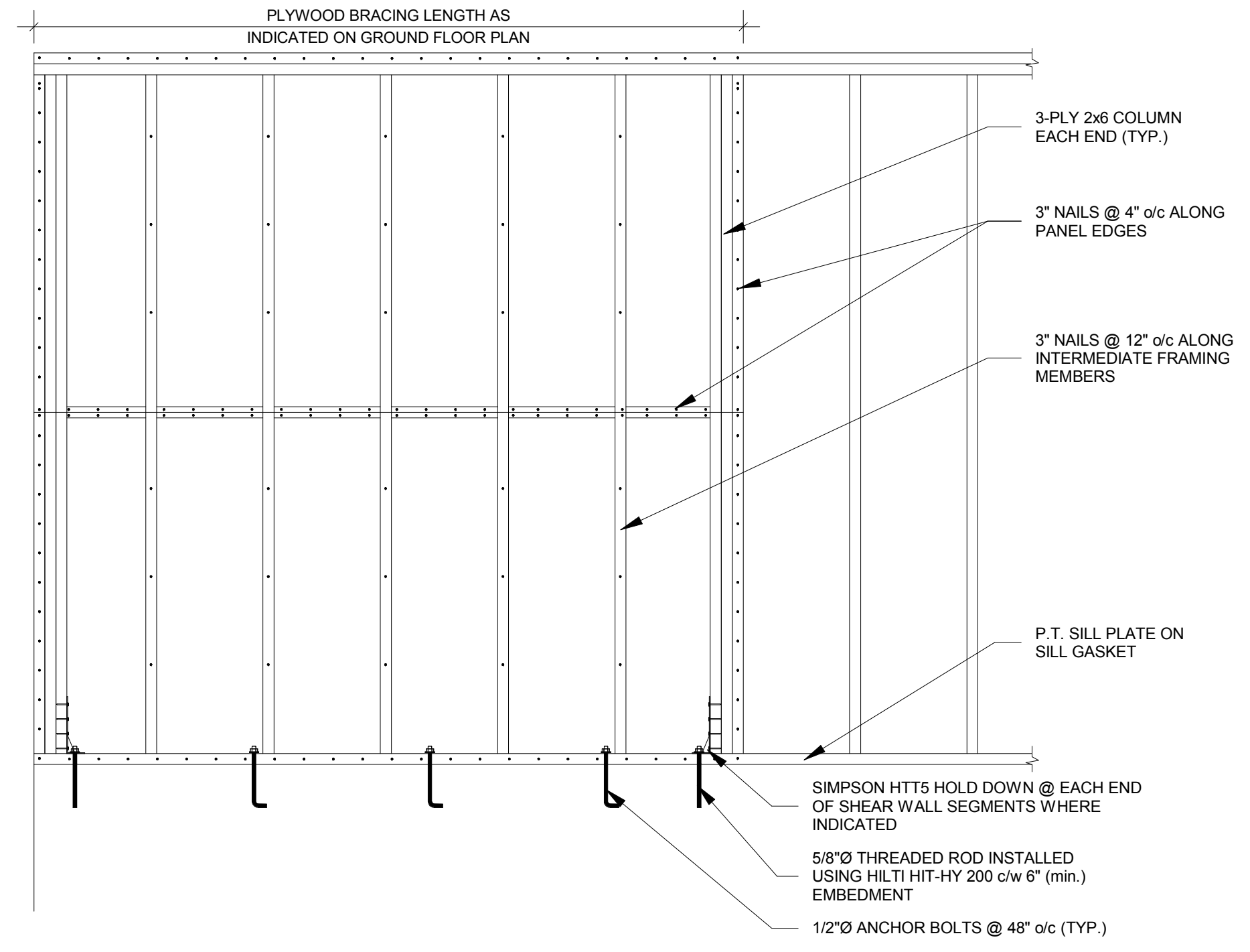
PLYWOOD BRACING LENGTH AS INDICATED ON GROUND FLOOR PLAN
3-PLY 2x6 COLUMN EACH END (TYP.)
3" NAILS @ 4" o/c ALONG PANEL EDGES
3" NAILS @ 12" o/c ALONG INTERMEDIATE FRAMING MEMBERS
P.T. SILL PLATE ON SILL GASKET
SIMPSON HTT5 HOLD DOWN @ EACH END OF SHEAR WALL SEGMENTS WHERE INDICATED
5/8"Ø THREADED ROD INSTALLED USING HILTI HIT-HY 200 c/w 6" (min.) EMBEDMENT
1/2"Ø ANCHOR BOLTS @ 48" o/c (TYP.)

6 SHEAR WALL DETAIL
1/2" = 1'-0"

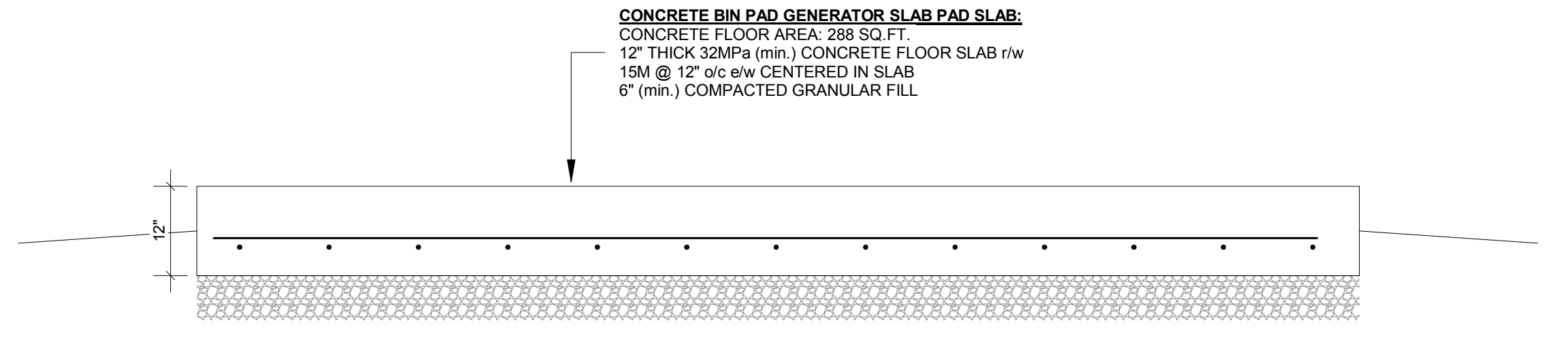
12"
REFER TO FOUNDATION PLAN FOR SIZE

CONCRETE BIN PAD GENERATOR SLAB PAD SLAB:
CONCRETE FLOOR AREA: 288 SQ.FT.
12" THICK 32MPa (min.) CONCRETE FLOOR SLAB r/w 15M @ 12" o/c e/w CENTERED IN SLAB
6" (min.) COMPACTED GRANULAR FILL

7 SECTION THROUGH CONCRETE BIN PAN
1/2" = 1'-0"

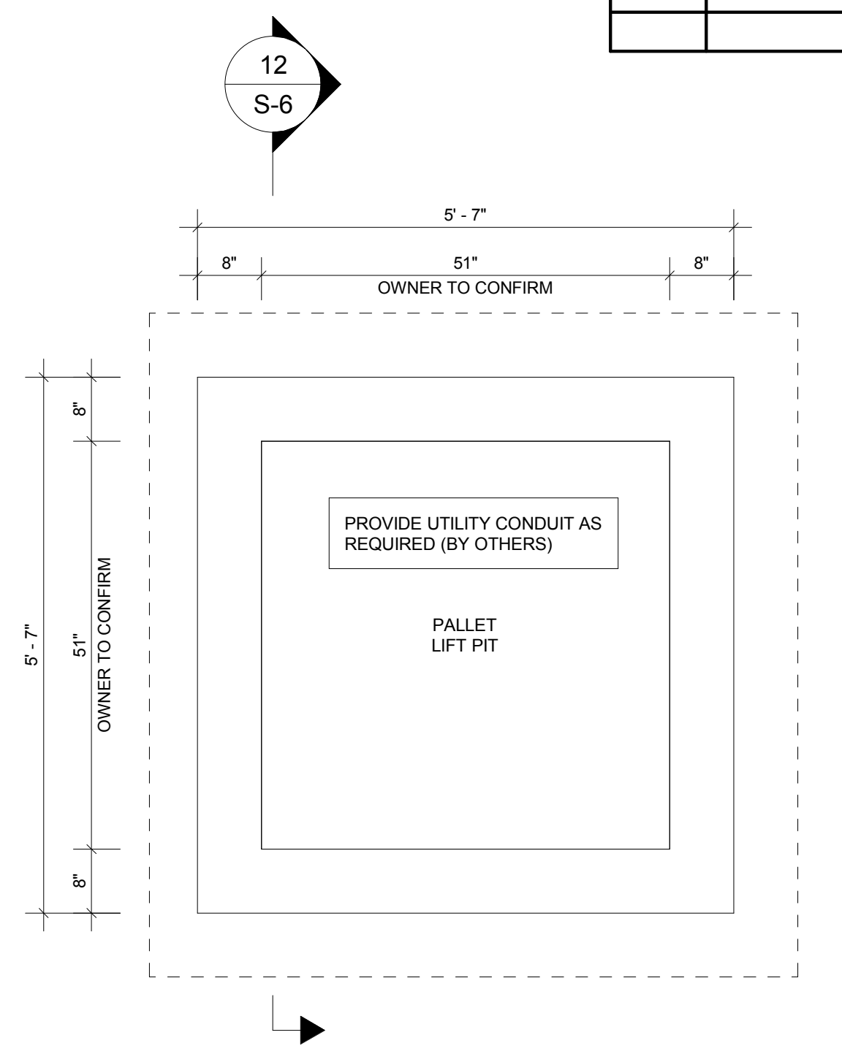
12
S-6
5' - 7"
8"
51"
8"
OWNER TO CONFIRM
5' - 7"
51"
OWNER TO CONFIRM
8"
8"
PROVIDE UTILITY CONDUIT AS REQUIRED (BY OTHERS)
PALLET LIFT PIT

11 PALLET LIFT PIT
1/2" = 1'-0"

NORTH

NOTES:

c/w COMPLETE WITH
FDN FOUNDATION
e/w EACH WAY
EX. EXISTING
H HIGH/HORIZONTAL
max. MAXIMUM
min. MINIMUM
OBC ONTARIO BUILDING CODE
o/c ON CENTER
P.T. PRESSURE TREATED
r/w REINFORCED WITH
t/o TOP OF
TYP. TYPICAL
V VERTICAL
W WIDE
WWW WELDED WIRE MESH

No.	REVISION DESCRIPTION	MM/DD/YY	CH'KD
1.	PRELIMINARY FOR DISCUSSION ONLY	05/07/25	TR
2.	REVISED FOR OWNER REVIEW	06/20/25	TR
3.	SITE PLAN - MINOR VARIANCE APPLICATION	07/10/25	TR
4.	ISSUED FOR APPROVAL	07/21/25	TR
5.	REVISED SITE PLAN	08/22/25	TR

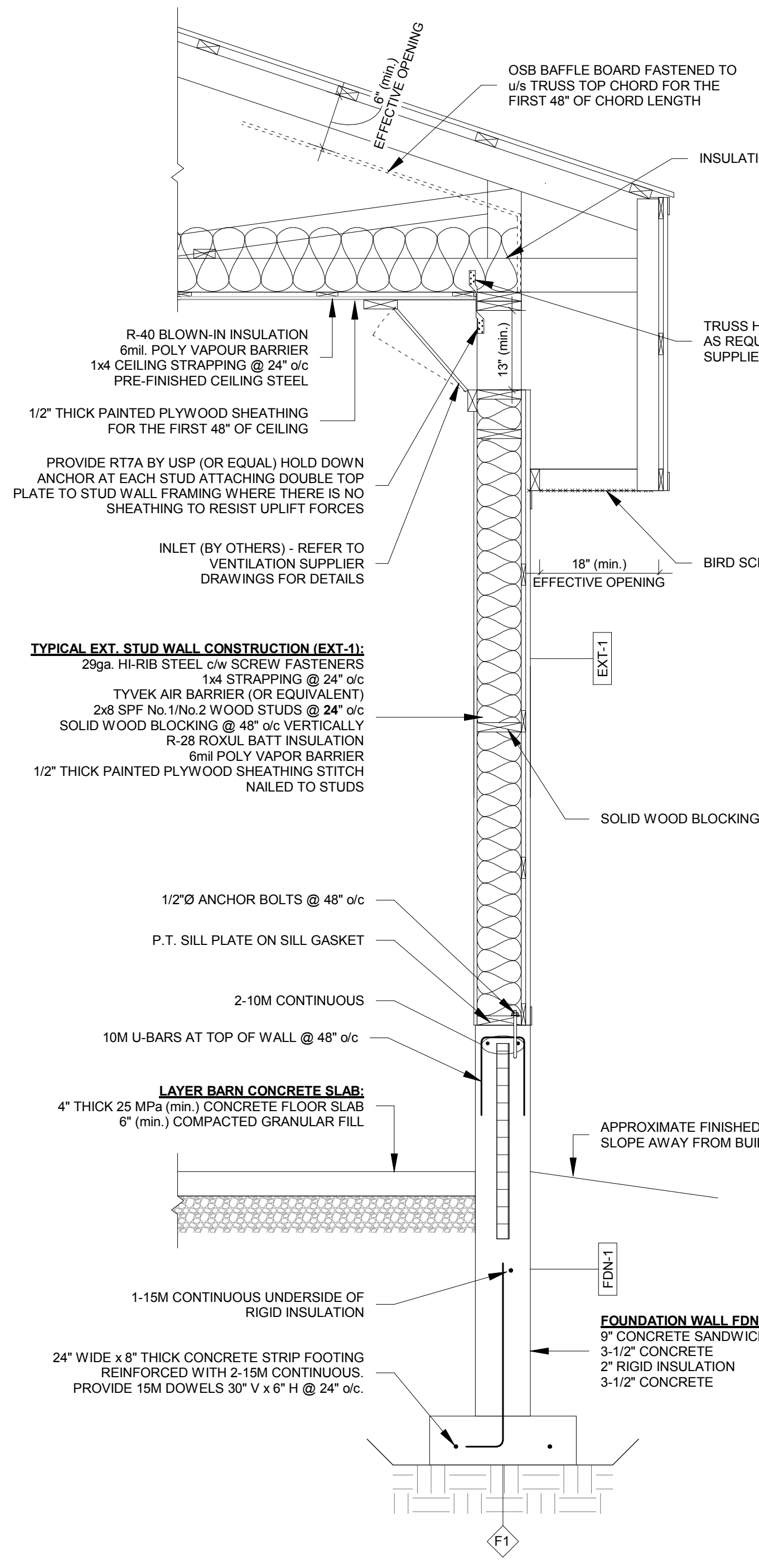
6" (min.) EFFECTIVE OPENING
OSB BAFFLE BOARD FASTENED TO u/s TRUSS TOP CHORD FOR THE FIRST 48" OF CHORD LENGTH
INSULATION STOP
R-40 BLOWN-IN INSULATION
6mil. POLY VAPOUR BARRIER
1x4 CEILING STRAPPING @ 24" o/c
PRE-FINISHED CEILING STEEL
13" (min.)
TRUSS HOLD DOWN ANCHORS AS REQUIRED BY TRUSS SUPPLIER / MANUFACTURER
1/2" THICK PAINTED PLYWOOD SHEATHING FOR THE FIRST 48" OF CEILING
PROVIDE RT7A BY USP (OR EQUAL) HOLD DOWN ANCHOR AT EACH STUD ATTACHING DOUBLE TOP PLATE TO STUD WALL FRAMING WHERE THERE IS NO SHEATHING TO RESIST UPLIFT FORCES
INLET (BY OTHERS) - REFER TO VENTILATION SUPPLIER DRAWINGS FOR DETAILS
BIRD SCREEN
18" (min.)
EFFECTIVE OPENING
EXT-1
SOLID WOOD BLOCKING @ MID-HEIGHT
1/2"Ø ANCHOR BOLTS @ 48" o/c
P.T. SILL PLATE ON SILL GASKET
2-10M CONTINUOUS
10M U-BARS AT TOP OF WALL @ 48" o/c
APPROXIMATE FINISHED GRADE - SLOPE AWAY FROM BUILDING
FDN-1
1-15M CONTINUOUS UNDERSIDE OF RIGID INSULATION
24" WIDE x 8" THICK CONCRETE STRIP FOOTING REINFORCED WITH 2-15M CONTINUOUS. PROVIDE 15M DOWELS 30" V x 6" H @ 24" o/c.
F1

TYPICAL EXT. STUD WALL CONSTRUCTION (EXT-1):
29ga. HI-RIB STEEL c/w SCREW FASTENERS
1x4 STRAPPING @ 24" o/c
TYVEK AIR BARRIER (OR EQUIVALENT)
2x8 SPF No.1/No.2 WOOD STUDS @ **24**" o/c
SOLID WOOD BLOCKING @ 48" o/c VERTICALLY
R-28 ROXUL BATT INSULATION
6mil POLY VAPOR BARRIER
1/2" THICK PAINTED PLYWOOD SHEATHING STITCH NAILED TO STUDS

LAYER BARN CONCRETE SLAB:
4" THICK 25 MPa (min.) CONCRETE FLOOR SLAB
6" (min.) COMPACTED GRANULAR FILL

FOUNDATION WALL FDN-1:
9" CONCRETE SANDWICH WALL
3-1/2" CONCRETE
2" RIGID INSULATION
3-1/2" CONCRETE

2 TYPICAL SECTION THROUGH EXT-1
1/2" = 1'-0"

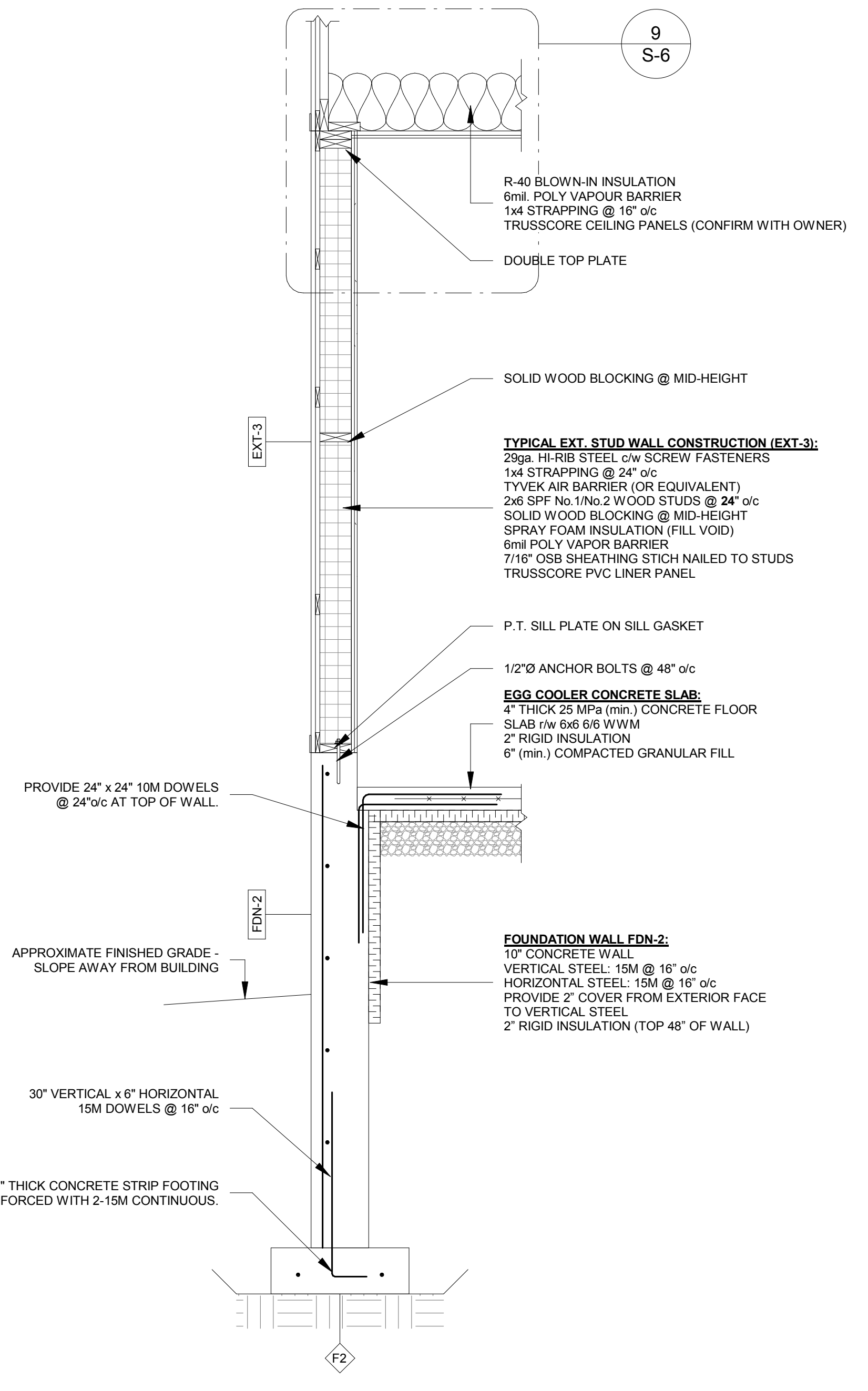
9
S-6
R-40 BLOWN-IN INSULATION
6mil. POLY VAPOUR BARRIER
1x4 STRAPPING @ 16" o/c
TRUSSCORE CEILING PANELS (CONFIRM WITH OWNER)
DOUBLE TOP PLATE
SOLID WOOD BLOCKING @ MID-HEIGHT
EXT-3
P.T. SILL PLATE ON SILL GASKET
1/2"Ø ANCHOR BOLTS @ 48" o/c
PROVIDE 24" x 24" 10M DOWELS @ 24"o/c AT TOP OF WALL.
FDN-2
APPROXIMATE FINISHED GRADE - SLOPE AWAY FROM BUILDING
30" VERTICAL x 6" HORIZONTAL 15M DOWELS @ 16" o/c
24" WIDE x 8" THICK CONCRETE STRIP FOOTING REINFORCED WITH 2-15M CONTINUOUS.
F2

TYPICAL EXT. STUD WALL CONSTRUCTION (EXT-3):
29ga. HI-RIB STEEL c/w SCREW FASTENERS
1x4 STRAPPING @ 24" o/c
TYVEK AIR BARRIER (OR EQUIVALENT)
2x6 SPF No.1/No.2 WOOD STUDS @ **24**" o/c
SOLID WOOD BLOCKING @ MID-HEIGHT
SPRAY FOAM INSULATION (FILL VOID)
6mil POLY VAPOR BARRIER
7/16" OSB SHEATHING STICH NAILED TO STUDS
TRUSSCORE PVC LINER PANEL

EGG COOLER CONCRETE SLAB:
4" THICK 25 MPa (min.) CONCRETE FLOOR SLAB r/w 6x6 6/6 WWM
2" RIGID INSULATION
6" (min.) COMPACTED GRANULAR FILL

FOUNDATION WALL FDN-2:
10" CONCRETE WALL
VERTICAL STEEL: 15M @ 16" o/c
HORIZONTAL STEEL: 15M @ 16" o/c
PROVIDE 2" COVER FROM EXTERIOR FACE TO VERTICAL STEEL
2" RIGID INSULATION (TOP 48" OF WALL)

3 TYPICAL SECTION THROUGH EXT-3
1/2" = 1'-0"

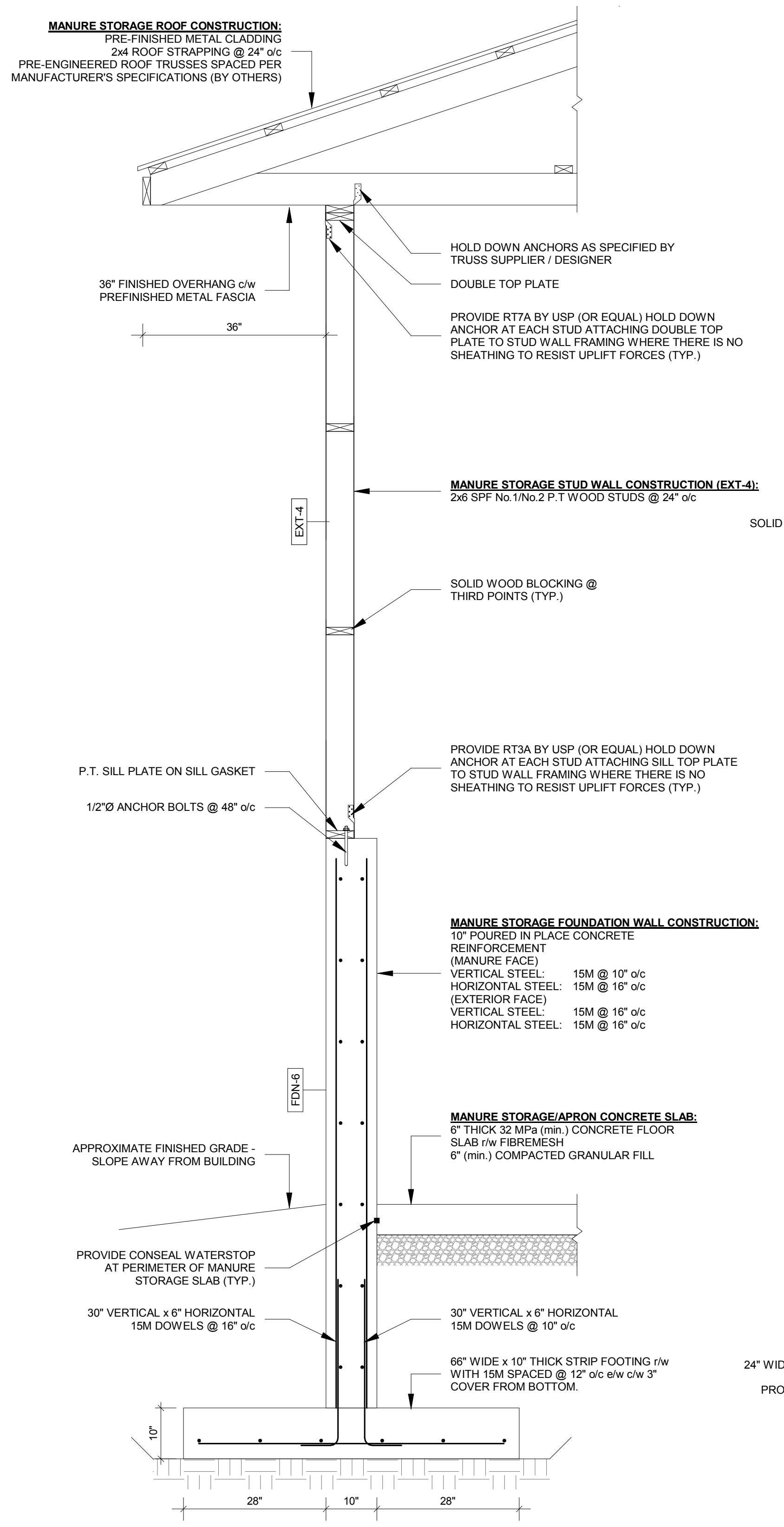
HOLD DOWN ANCHORS AS SPECIFIED BY TRUSS SUPPLIER / DESIGNER
DOUBLE TOP PLATE
36" FINISHED OVERHANG c/w PREFINISHED METAL FASCIA
36"
PROVIDE RT7A BY USP (OR EQUAL) HOLD DOWN ANCHOR AT EACH STUD ATTACHING DOUBLE TOP PLATE TO STUD WALL FRAMING WHERE THERE IS NO SHEATHING TO RESIST UPLIFT FORCES (TYP.)
EXT-4
SOLID WOOD BLOCKING @ THIRD POINTS (TYP.)
PROVIDE RT3A BY USP (OR EQUAL) HOLD DOWN ANCHOR AT EACH STUD ATTACHING SILL TOP PLATE TO STUD WALL FRAMING WHERE THERE IS NO SHEATHING TO RESIST UPLIFT FORCES (TYP.)
P.T. SILL PLATE ON SILL GASKET
1/2"Ø ANCHOR BOLTS @ 48" o/c
FDN-6
APPROXIMATE FINISHED GRADE - SLOPE AWAY FROM BUILDING
PROVIDE CONSEAL WATERSTOP AT PERIMETER OF MANURE STORAGE SLAB (TYP.)
30" VERTICAL x 6" HORIZONTAL 15M DOWELS @ 16" o/c
30" VERTICAL x 6" HORIZONTAL 15M DOWELS @ 10" o/c
66" WIDE x 10" THICK STRIP FOOTING r/w WITH 15M SPACED @ 12" o/c e/w c/w 3" COVER FROM BOTTOM.
10"
28"
10"
28"
66"

MANURE STORAGE ROOF CONSTRUCTION:
PRE-FINISHED METAL CLADDING
2x4 ROOF STRAPPING @ 24" o/c
PRE-ENGINEERED ROOF TRUSSES SPACED PER MANUFACTURER'S SPECIFICATIONS (BY OTHERS)

MANURE STORAGE STUD WALL CONSTRUCTION (EXT-4):
2x6 SPF No.1/No.2 P.T WOOD STUDS @ 24" o/c

MANURE STORAGE FOUNDATION WALL CONSTRUCTION:
10" POURED IN PLACE CONCRETE
REINFORCEMENT
(MANURE FACE)
VERTICAL STEEL: 15M @ 10" o/c
HORIZONTAL STEEL: 15M @ 16" o/c
(EXTERIOR FACE)
VERTICAL STEEL: 15M @ 16" o/c
HORIZONTAL STEEL: 15M @ 16" o/c

MANURE STORAGE/APRON CONCRETE SLAB:
6" THICK 32 MPa (min.) CONCRETE FLOOR SLAB r/w FIBREMESH
6" (min.) COMPACTED GRANULAR FILL

4 TYPICAL SECTION THROUGH EXT-4
1/2" = 1'-0"

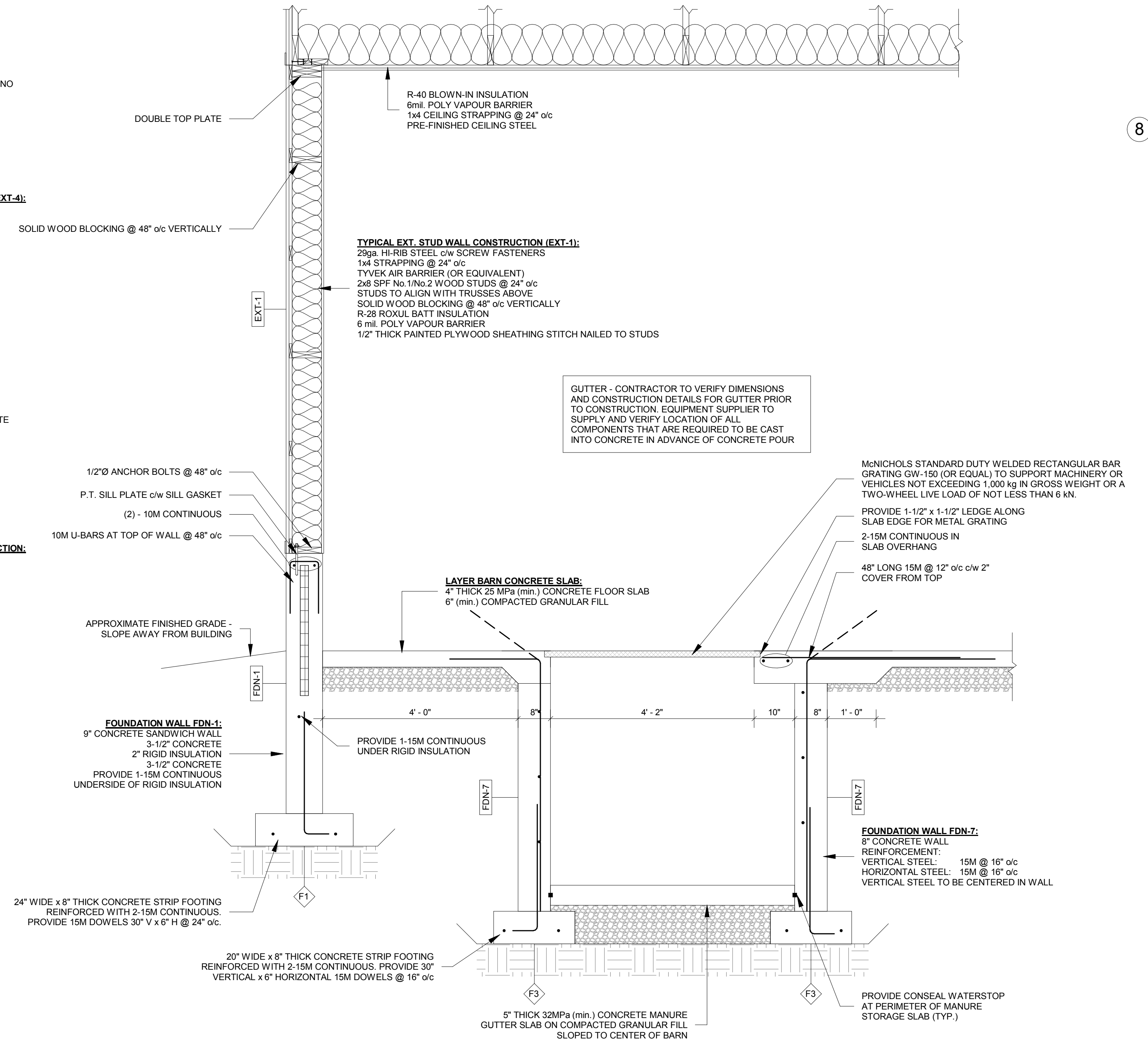
R-40 BLOWN-IN INSULATION
6mil. POLY VAPOUR BARRIER
1x4 CEILING STRAPPING @ 24" o/c
PRE-FINISHED CEILING STEEL
DOUBLE TOP PLATE
SOLID WOOD BLOCKING @ 48" o/c VERTICALLY
EXT-1
1/2"Ø ANCHOR BOLTS @ 48" o/c
P.T. SILL PLATE c/w SILL GASKET
(2) - 10M CONTINUOUS
10M U-BARS AT TOP OF WALL @ 48" o/c
APPROXIMATE FINISHED GRADE - SLOPE AWAY FROM BUILDING
FDN-1
PROVIDE 1-15M CONTINUOUS UNDER RIGID INSULATION
24" WIDE x 8" THICK CONCRETE STRIP FOOTING REINFORCED WITH 2-15M CONTINUOUS. PROVIDE 15M DOWELS 30" V x 6" H @ 24" o/c.
F1
McNICHOLS STANDARD DUTY WELDED RECTANGULAR BAR GRATING GW-150 (OR EQUAL) TO SUPPORT MACHINERY OR VEHICLES NOT EXCEEDING 1,000 kg IN GROSS WEIGHT OR A TWO-WHEEL LIVE LOAD OF NOT LESS THAN 6 kN.
PROVIDE 1-1/2" x 1-1/2" LEDGE ALONG SLAB EDGE FOR METAL GRATING
2-15M CONTINUOUS IN SLAB OVERHANG
48" LONG 15M @ 12" o/c c/w 2" COVER FROM TOP
4' - 0"
8"
4' - 2"
10"
8"
1' - 0"
FDN-7
FDN-7
20" WIDE x 8" THICK CONCRETE STRIP FOOTING REINFORCED WITH 2-15M CONTINUOUS. PROVIDE 30" VERTICAL x 6" HORIZONTAL 15M DOWELS @ 16" o/c
F3
F3
5" THICK 32MPa (min.) CONCRETE MANURE GUTTER SLAB ON COMPACTED GRANULAR FILL SLOPED TO CENTER OF BARN
PROVIDE CONSEAL WATERSTOP AT PERIMETER OF MANURE STORAGE SLAB (TYP.)

TYPICAL EXT. STUD WALL CONSTRUCTION (EXT-1):
29ga. HI-RIB STEEL c/w SCREW FASTENERS
1x4 STRAPPING @ 24" o/c
TYVEK AIR BARRIER (OR EQUIVALENT)
2x8 SPF No.1/No.2 WOOD STUDS @ 24" o/c
STUDS TO ALIGN WITH TRUSSES ABOVE
SOLID WOOD BLOCKING @ 48" o/c VERTICALLY
R-28 ROXUL BATT INSULATION
6 mil. POLY VAPOUR BARRIER
1/2" THICK PAINTED PLYWOOD SHEATHING STITCH NAILED TO STUDS

GUTTER - CONTRACTOR TO VERIFY DIMENSIONS AND CONSTRUCTION DETAILS FOR GUTTER PRIOR TO CONSTRUCTION. EQUIPMENT SUPPLIER TO SUPPLY AND VERIFY LOCATION OF ALL COMPONENTS THAT ARE REQUIRED TO BE CAST INTO CONCRETE IN ADVANCE OF CONCRETE POUR

LAYER BARN CONCRETE SLAB:
4" THICK 25 MPa (min.) CONCRETE FLOOR SLAB
6" (min.) COMPACTED GRANULAR FILL

FOUNDATION WALL FDN-1:
9" CONCRETE SANDWICH WALL
3-1/2" CONCRETE
2" RIGID INSULATION
3-1/2" CONCRETE
PROVIDE 1-15M CONTINUOUS UNDERSIDE OF RIGID INSULATION

FOUNDATION WALL FDN-7:
8" CONCRETE WALL
REINFORCEMENT:
VERTICAL STEEL: 15M @ 16" o/c
HORIZONTAL STEEL: 15M @ 16" o/c
VERTICAL STEEL TO BE CENTERED IN WALL

5 SECTION THROUGH END WALL AT CONCRETE GUTTER
1/2" = 1'-0"

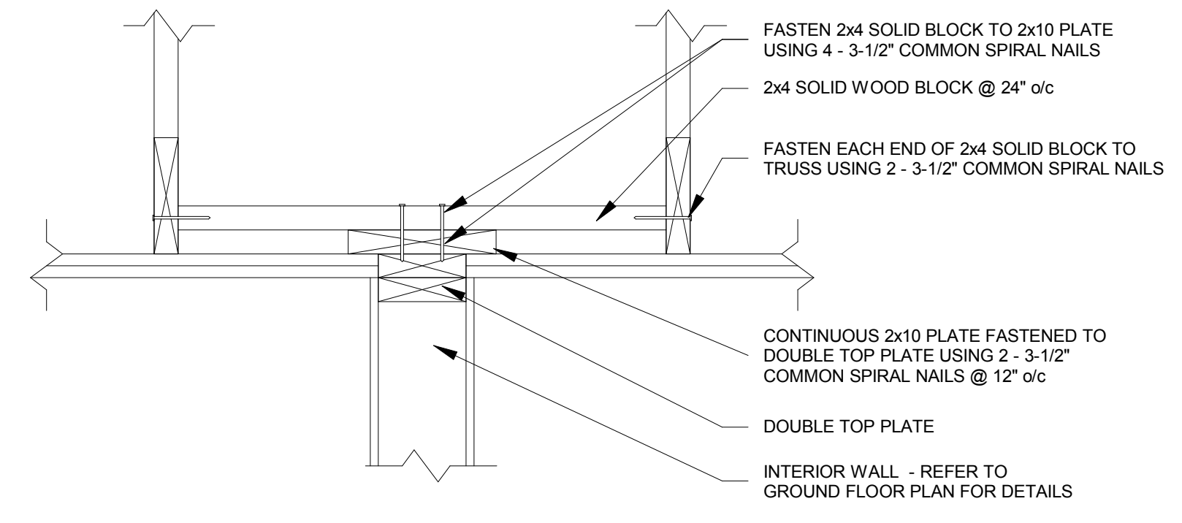
FASTEN 2x4 SOLID BLOCK TO 2x10 PLATE USING 4 - 3-1/2" COMMON SPIRAL NAILS
2x4 SOLID WOOD BLOCK @ 24" o/c
FASTEN EACH END OF 2x4 SOLID BLOCK TO TRUSS USING 2 - 3-1/2" COMMON SPIRAL NAILS
CONTINUOUS 2x10 PLATE FASTENED TO DOUBLE TOP PLATE USING 2 - 3-1/2" COMMON SPIRAL NAILS @ 12" o/c
DOUBLE TOP PLATE
INTERIOR WALL - REFER TO GROUND FLOOR PLAN FOR DETAILS

8 TYPICAL INTERIOR WALL TO TRUSS CONNECTION DETAIL
1" = 1'-0"

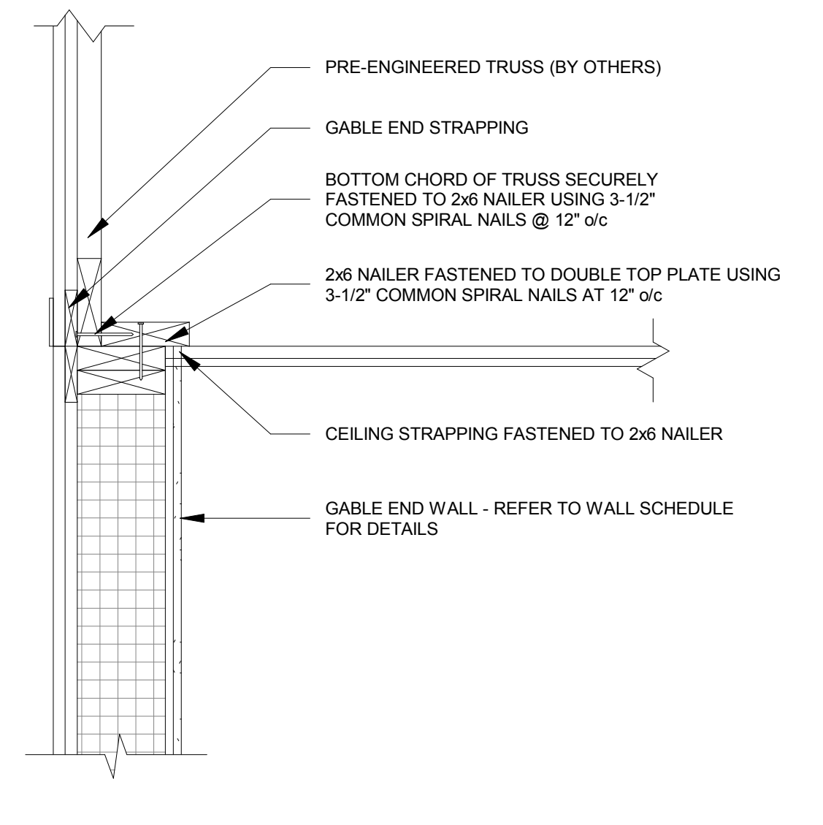
PRE-ENGINEERED TRUSS (BY OTHERS)
GABLE END STRAPPING
BOTTOM CHORD OF TRUSS SECURELY FASTENED TO 2x6 NAILER USING 3-1/2" COMMON SPIRAL NAILS @ 12" o/c
2x6 NAILER FASTENED TO DOUBLE TOP PLATE USING 3-1/2" COMMON SPIRAL NAILS AT 12" o/c
CEILING STRAPPING FASTENED TO 2x6 NAILER
GABLE END WALL - REFER TO WALL SCHEDULE FOR DETAILS

9 TYPICAL GABLE TRUSS CONNECTION DETAIL
1" = 1'-0"

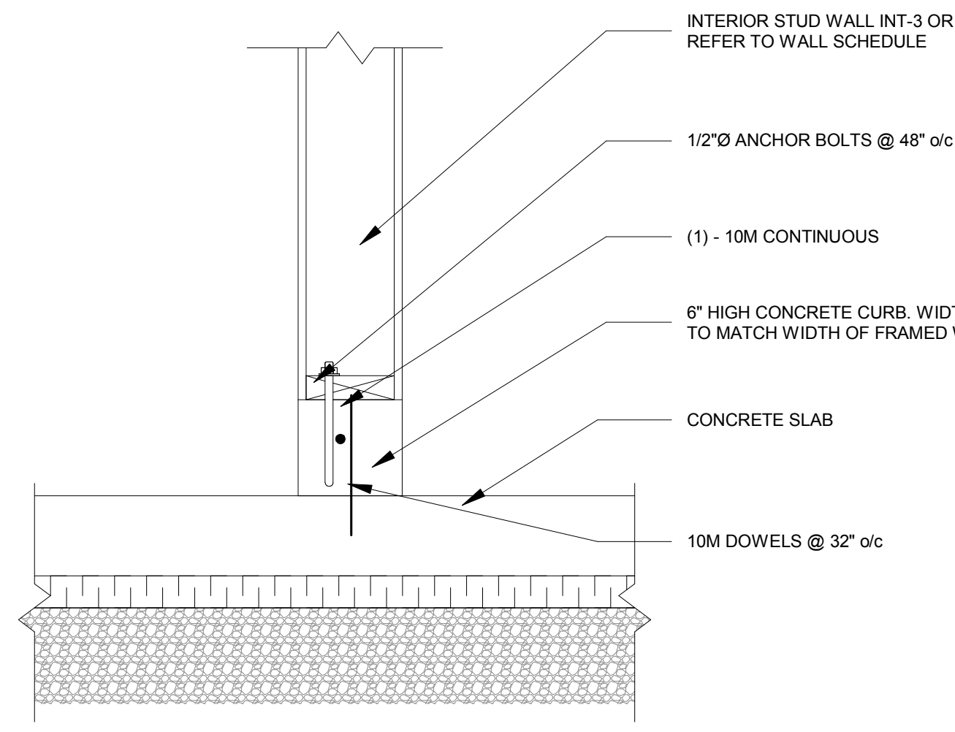
INTERIOR STUD WALL INT-3 OR INT-4 REFER TO WALL SCHEDULE
1/2"Ø ANCHOR BOLTS @ 48" o/c
(1) - 10M CONTINUOUS
6" HIGH CONCRETE CURB. WIDTH OF CURB TO MATCH WIDTH OF FRAMED WALL ABOVE
CONCRETE SLAB
10M DOWELS @ 32" o/c

10 TYPICAL CONCRETE CURB DETAIL
1" = 1'-0"

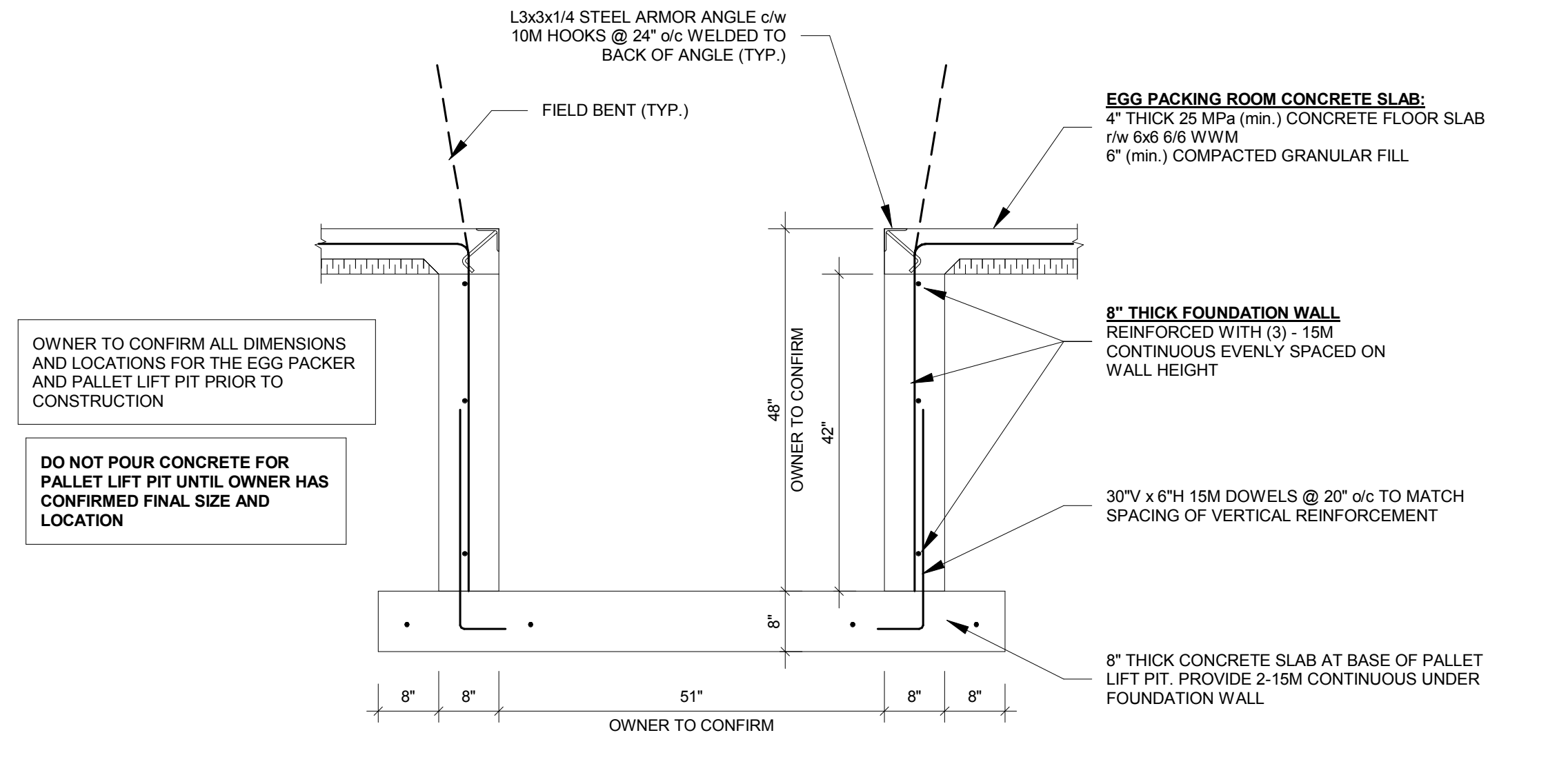
L3x3x1/4 STEEL ARMOR ANGLE c/w 10M HOOKS @ 24" o/c WELDED TO BACK OF ANGLE (TYP.)
FIELD BENT (TYP.)
48"
42"
OWNER TO CONFIRM
8"
8"
8"
51"
8"
8"
OWNER TO CONFIRM
30"V x 6"H 15M DOWELS @ 20" o/c TO MATCH SPACING OF VERTICAL REINFORCEMENT
8" THICK CONCRETE SLAB AT BASE OF PALLET LIFT PIT. PROVIDE 2-15M CONTINUOUS UNDER FOUNDATION WALL

OWNER TO CONFIRM ALL DIMENSIONS AND LOCATIONS FOR THE EGG PACKER AND PALLET LIFT PIT PRIOR TO CONSTRUCTION

DO NOT POUR CONCRETE FOR PALLET LIFT PIT UNTIL OWNER HAS CONFIRMED FINAL SIZE AND LOCATION

EGG PACKING ROOM CONCRETE SLAB:
4" THICK 25 MPa (min.) CONCRETE FLOOR SLAB r/w 6x6 6/6 WWM
6" (min.) COMPACTED GRANULAR FILL

8" THICK FOUNDATION WALL
REINFORCED WITH (3) - 15M CONTINUOUS EVENLY SPACED ON WALL HEIGHT

12 SECTION THROUGH PALLET LIFT PIT
1/2" = 1'-0"

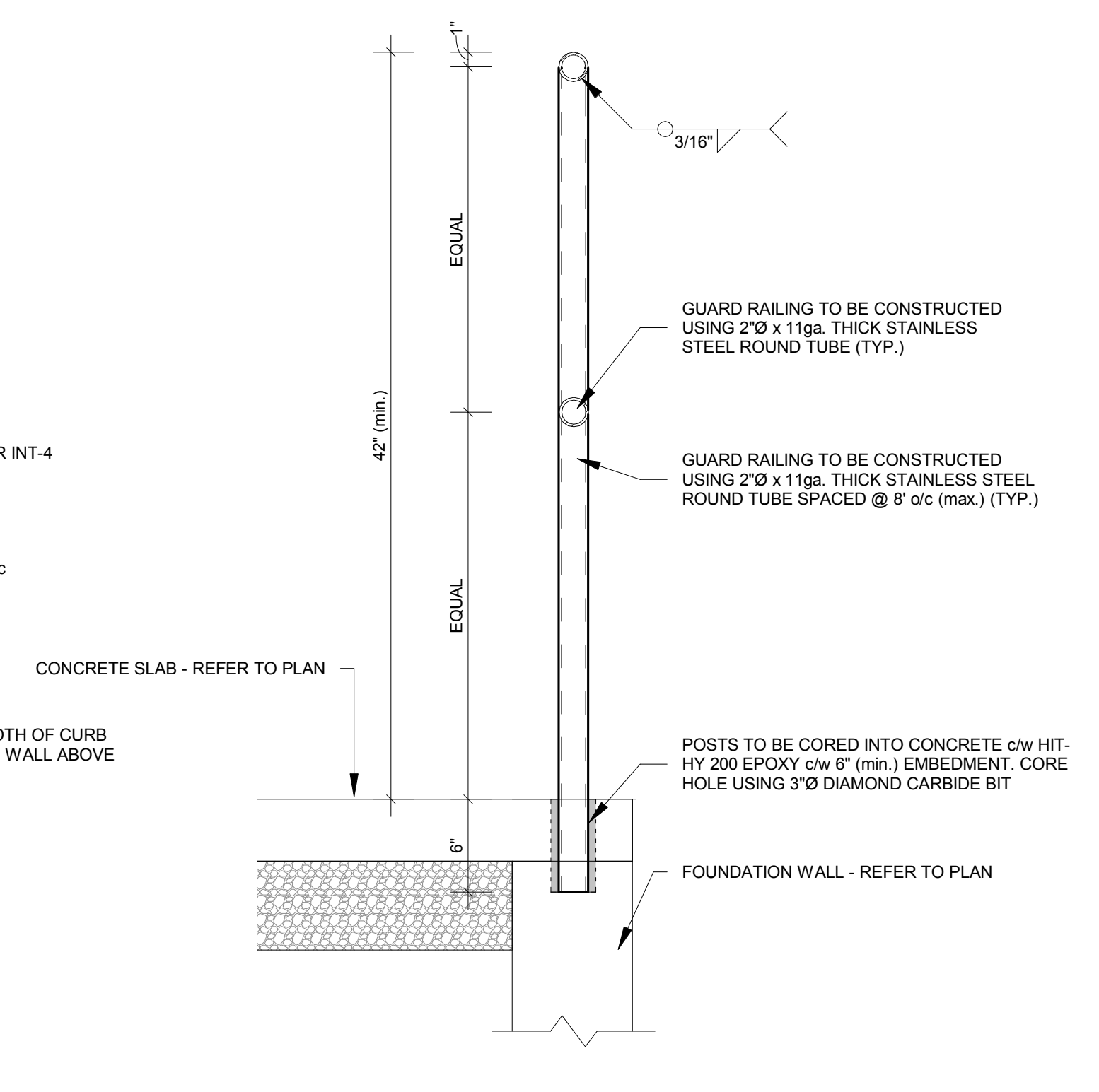
1"
3/16"
EQUAL
EQUAL
42" (min.)
6"
CONCRETE SLAB - REFER TO PLAN
GUARD RAILING TO BE CONSTRUCTED USING 2"Ø x 11ga. THICK STAINLESS STEEL ROUND TUBE (TYP.)
GUARD RAILING TO BE CONSTRUCTED USING 2"Ø x 11ga. THICK STAINLESS STEEL ROUND TUBE SPACED @ 8' o/c (max.) (TYP.)
POSTS TO BE CORED INTO CONCRETE c/w HIT-HY 200 EPOXY c/w 6" (min.) EMBEDMENT. CORE HOLE USING 3"Ø DIAMOND CARBIDE BIT
FOUNDATION WALL - REFER TO PLAN

13 TYPICAL 42" HIGH GUARD DETAIL
1" = 1'-0"

CONTRACTOR

08/22/25
T. J. REGIER
100550036

CONSULTANT

MR ENGINEERING AND DESIGN LTD.
CIVIL • COMMERCIAL • AGRICULTURAL
145 Thames Road, West, Unit 4
Exeter, ON, N0M 1S3
Telephone: (519)-317-0128
Email: admin@mrengdesign.com

BRENAIR FARMS INC.
LAYER BARN

7189 PARKHOUSE DRIVE
MELBOURNE, ON
N0L 1T0

SECTIONS & DETAILS

DESIGN	**TR**
DRAWN	**TR**
CHECKED	**TR**
APPROVED	**TR**
DATE	**AUGUST 2025**

PROJECT No.
MR25-027

SHEET No.
S-6

SCALE
As indicated

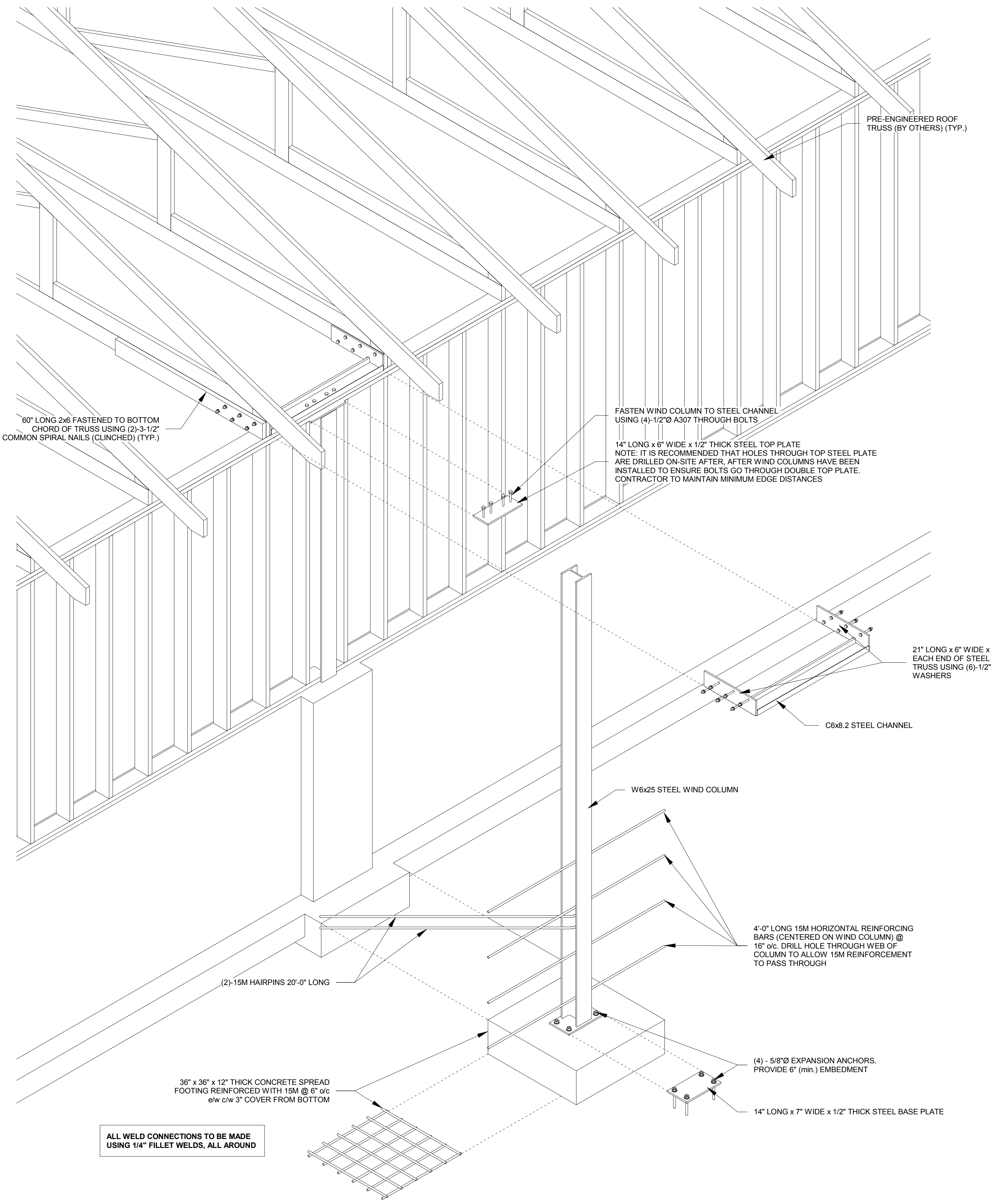
PRE-ENGINEERED ROOF TRUSS (BY OTHERS) (TYP.)
60" LONG 2x6 FASTENED TO BOTTOM CHORD OF TRUSS USING (2)-3-1/2" COMMON SPIRAL NAILS (CLINCHED) (TYP.)
FASTEN WIND COLUMN TO STEEL CHANNEL USING (4)-1/2"Ø A307 THROUGH BOLTS
14" LONG x 6" WIDE x 1/2" THICK STEEL TOP PLATE NOTE: IT IS RECOMMENDED THAT HOLES THROUGH TOP STEEL PLATE ARE DRILLED ON-SITE AFTER, AFTER WIND COLUMNS HAVE BEEN INSTALLED TO ENSURE BOLTS GO THROUGH DOUBLE TOP PLATE. CONTRACTOR TO MAINTAIN MINIMUM EDGE DISTANCES
21" LONG x 6" WIDE x 1/2" THICK STEEL PLATE WELDED TO EACH END OF STEEL CHANNEL. FASTEN STEEL PLATE TO EACH TRUSS USING (6)-1/2"Ø A307 THROUGH BOLTS c/w PLATE WASHERS
C6x8.2 STEEL CHANNEL
W6x25 STEEL WIND COLUMN
4'-0" LONG 15M HORIZONTAL REINFORCING BARS (CENTERED ON WIND COLUMN) @ 16" o/c. DRILL HOLE THROUGH WEB OF COLUMN TO ALLOW 15M REINFORCEMENT TO PASS THROUGH
(2)-15M HAIRPINS 20'-0" LONG
(4) - 5/8"Ø EXPANSION ANCHORS. PROVIDE 6" (min.) EMBEDMENT
36" x 36" x 12" THICK CONCRETE SPREAD FOOTING REINFORCED WITH 15M @ 6" o/c e/w c/w 3" COVER FROM BOTTOM
14" LONG x 7" WIDE x 1/2" THICK STEEL BASE PLATE
ALL WELD CONNECTIONS TO BE MADE USING 1/4" FILLET WELDS, ALL AROUND

① TYPICAL WIND COLUMN WC1 DETAIL - ISOMETRIC VIEW
1/2" = 1'-0"

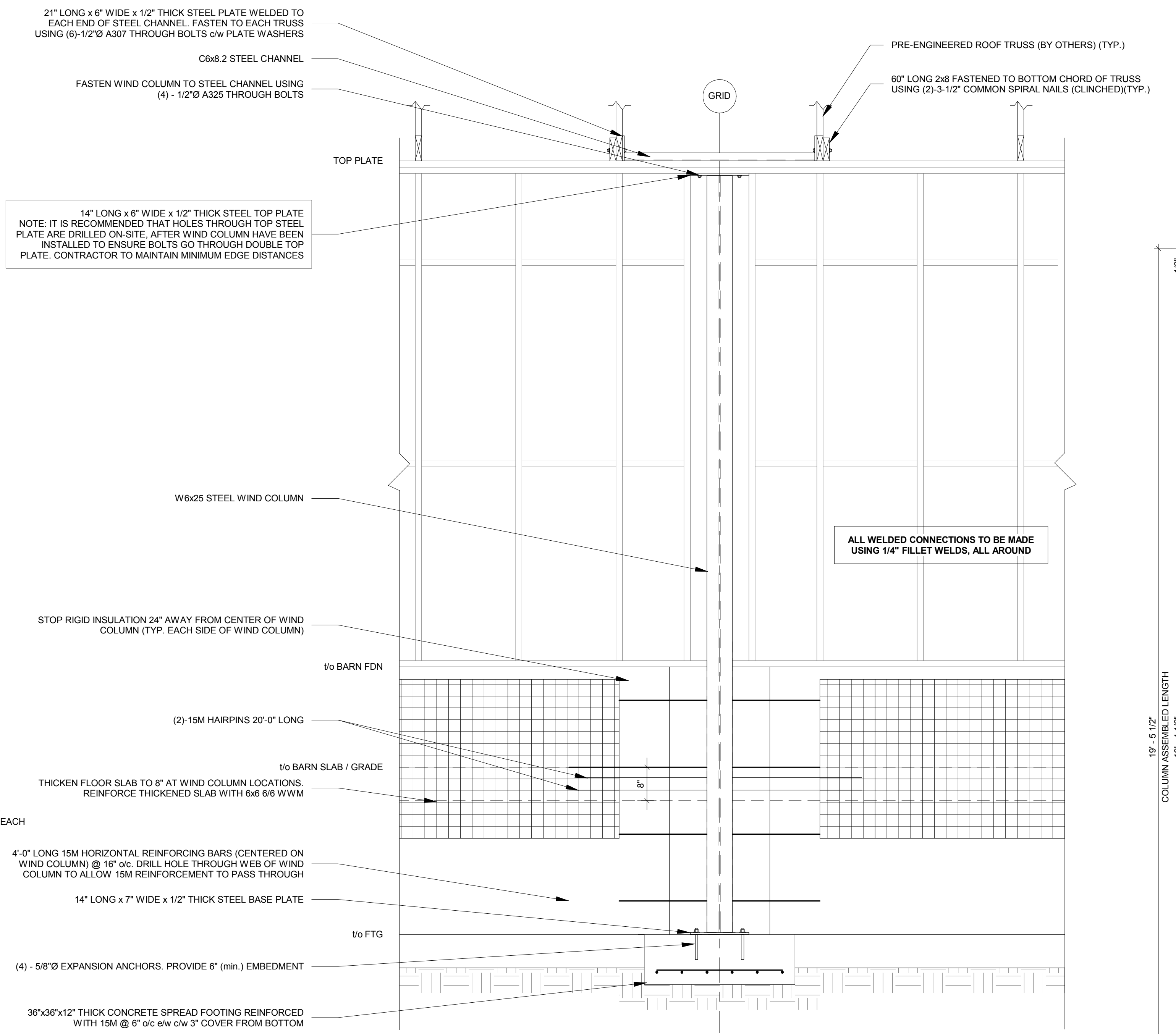
21" LONG x 6" WIDE x 1/2" THICK STEEL PLATE WELDED TO EACH END OF STEEL CHANNEL. FASTEN TO EACH TRUSS USING (6)-1/2"Ø A307 THROUGH BOLTS c/w PLATE WASHERS
C6x8.2 STEEL CHANNEL
FASTEN WIND COLUMN TO STEEL CHANNEL USING (4) - 1/2"Ø A325 THROUGH BOLTS
PRE-ENGINEERED ROOF TRUSS (BY OTHERS) (TYP.)
60" LONG 2x8 FASTENED TO BOTTOM CHORD OF TRUSS USING (2)-3-1/2" COMMON SPIRAL NAILS (CLINCHED)(TYP.)
GRID
TOP PLATE
14" LONG x 6" WIDE x 1/2" THICK STEEL TOP PLATE NOTE: IT IS RECOMMENDED THAT HOLES THROUGH TOP STEEL PLATE ARE DRILLED ON-SITE, AFTER WIND COLUMN HAVE BEEN INSTALLED TO ENSURE BOLTS GO THROUGH DOUBLE TOP PLATE. CONTRACTOR TO MAINTAIN MINIMUM EDGE DISTANCES
W6x25 STEEL WIND COLUMN
ALL WELDED CONNECTIONS TO BE MADE USING 1/4" FILLET WELDS, ALL AROUND
STOP RIGID INSULATION 24" AWAY FROM CENTER OF WIND COLUMN (TYP. EACH SIDE OF WIND COLUMN)
t/o BARN FDN
(2)-15M HAIRPINS 20'-0" LONG
t/o BARN SLAB / GRADE
8"
THICKEN FLOOR SLAB TO 8" AT WIND COLUMN LOCATIONS. REINFORCE THICKENED SLAB WITH 6x6 6/6 WWM
4'-0" LONG 15M HORIZONTAL REINFORCING BARS (CENTERED ON WIND COLUMN) @ 16" o/c. DRILL HOLE THROUGH WEB OF WIND COLUMN TO ALLOW 15M REINFORCEMENT TO PASS THROUGH
14" LONG x 7" WIDE x 1/2" THICK STEEL BASE PLATE
t/o FTG
(4) - 5/8"Ø EXPANSION ANCHORS. PROVIDE 6" (min.) EMBEDMENT
36"x36"x12" THICK CONCRETE SPREAD FOOTING REINFORCED WITH 15M @ 6" o/c e/w c/w 3" COVER FROM BOTTOM

② TYPICAL WIND COLUMN WC1 ELEVATION DETAIL
1/2" = 1'-0"

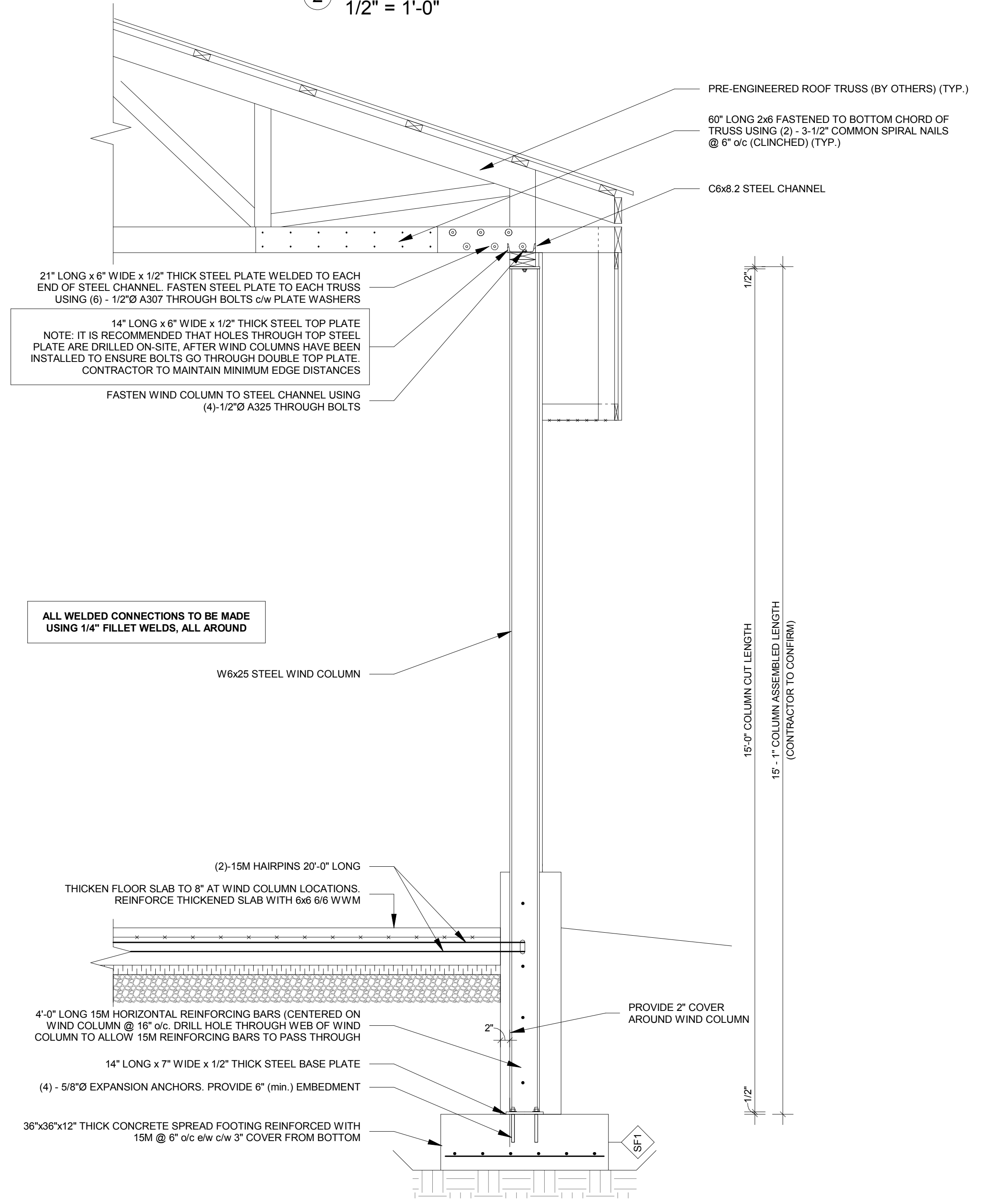
PRE-ENGINEERED ROOF TRUSS (BY OTHERS) (TYP.)
60" LONG 2x6 FASTENED TO BOTTOM CHORD OF TRUSS USING (2) - 3-1/2" COMMON SPIRAL NAILS @ 6" o/c (CLINCHED) (TYP.)
C6x8.2 STEEL CHANNEL
21" LONG x 6" WIDE x 1/2" THICK STEEL PLATE WELDED TO EACH END OF STEEL CHANNEL. FASTEN STEEL PLATE TO EACH TRUSS USING (6) - 1/2"Ø A307 THROUGH BOLTS c/w PLATE WASHERS
14" LONG x 6" WIDE x 1/2" THICK STEEL TOP PLATE NOTE: IT IS RECOMMENDED THAT HOLES THROUGH TOP STEEL PLATE ARE DRILLED ON-SITE, AFTER WIND COLUMNS HAVE BEEN INSTALLED TO ENSURE BOLTS GO THROUGH DOUBLE TOP PLATE. CONTRACTOR TO MAINTAIN MINIMUM EDGE DISTANCES
FASTEN WIND COLUMN TO STEEL CHANNEL USING (4)-1/2"Ø A325 THROUGH BOLTS
1/2"
ALL WELDED CONNECTIONS TO BE MADE USING 1/4" FILLET WELDS, ALL AROUND
W6x25 STEEL WIND COLUMN
15'-0" COLUMN CUT LENGTH
15' - 1" COLUMN ASSEMBLED LENGTH (CONTRACTOR TO CONFIRM)
(2)-15M HAIRPINS 20'-0" LONG
THICKEN FLOOR SLAB TO 8" AT WIND COLUMN LOCATIONS. REINFORCE THICKENED SLAB WITH 6x6 6/6 WWM
PROVIDE 2" COVER AROUND WIND COLUMN
2"
4'-0" LONG 15M HORIZONTAL REINFORCING BARS (CENTERED ON WIND COLUMN @ 16" o/c. DRILL HOLE THROUGH WEB OF WIND COLUMN TO ALLOW 15M REINFORCING BARS TO PASS THROUGH
14" LONG x 7" WIDE x 1/2" THICK STEEL BASE PLATE
(4) - 5/8"Ø EXPANSION ANCHORS. PROVIDE 6" (min.) EMBEDMENT
36"x36"x12" THICK CONCRETE SPREAD FOOTING REINFORCED WITH 15M @ 6" o/c e/w c/w 3" COVER FROM BOTTOM
SF1

③ TYPICAL SECTION THROUGH WIND COLUMN WC1
1/2" = 1'-0"

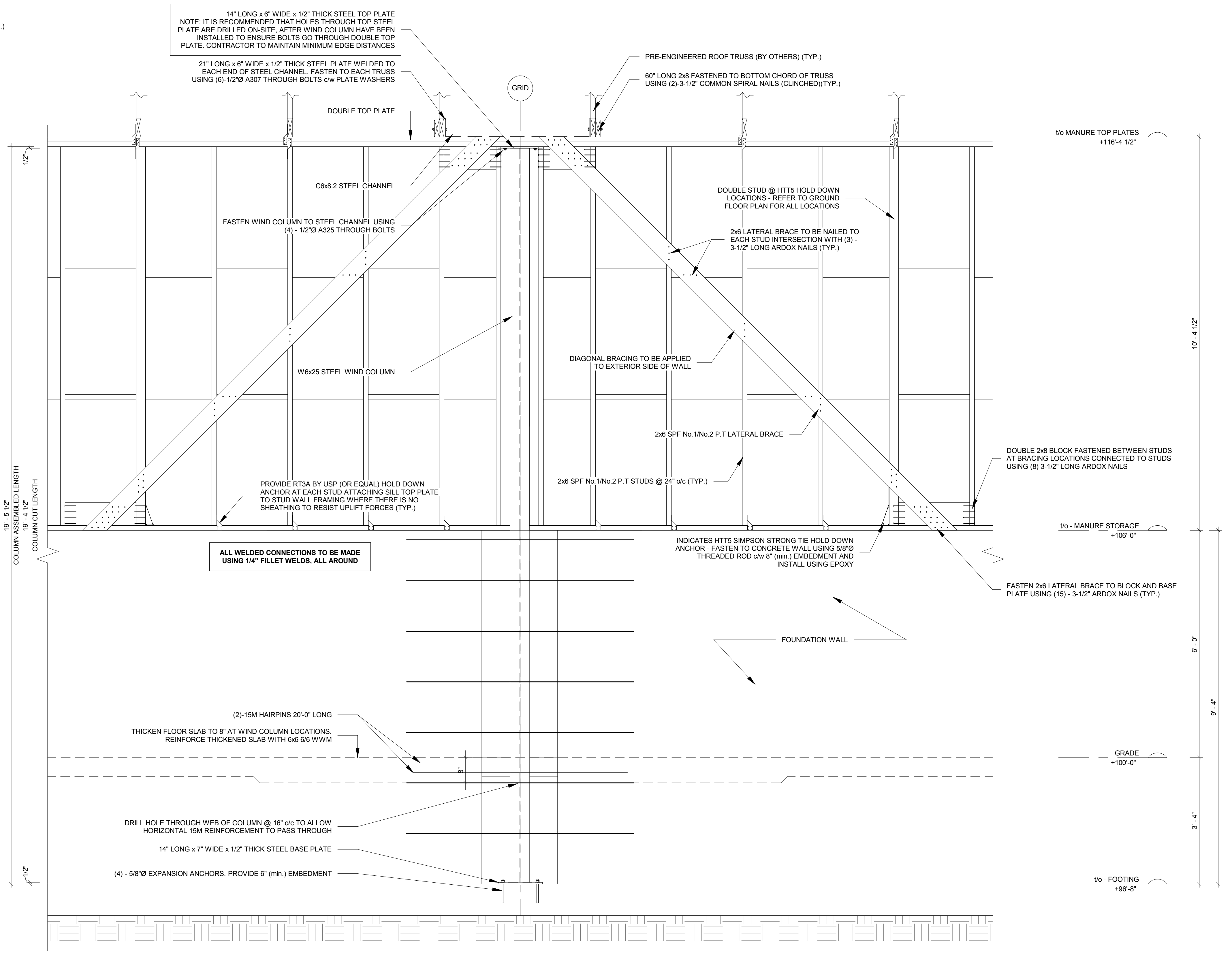
14" LONG x 6" WIDE x 1/2" THICK STEEL TOP PLATE NOTE: IT IS RECOMMENDED THAT HOLES THROUGH TOP STEEL PLATE ARE DRILLED ON-SITE, AFTER WIND COLUMN HAVE BEEN INSTALLED TO ENSURE BOLTS GO THROUGH DOUBLE TOP PLATE. CONTRACTOR TO MAINTAIN MINIMUM EDGE DISTANCES
21" LONG x 6" WIDE x 1/2" THICK STEEL PLATE WELDED TO EACH END OF STEEL CHANNEL. FASTEN TO EACH TRUSS USING (6)-1/2"Ø A307 THROUGH BOLTS c/w PLATE WASHERS
DOUBLE TOP PLATE
GRID
PRE-ENGINEERED ROOF TRUSS (BY OTHERS) (TYP.)
60" LONG 2x8 FASTENED TO BOTTOM CHORD OF TRUSS USING (2)-3-1/2" COMMON SPIRAL NAILS (CLINCHED)(TYP.)
t/o MANURE TOP PLATES +116'-4 1/2"
C6x8.2 STEEL CHANNEL
FASTEN WIND COLUMN TO STEEL CHANNEL USING (4) - 1/2"Ø A325 THROUGH BOLTS
DOUBLE STUD @ HTT5 HOLD DOWN LOCATIONS - REFER TO GROUND FLOOR PLAN FOR ALL LOCATIONS
2x6 LATERAL BRACE TO BE NAILED TO EACH STUD INTERSECTION WITH (3) - 3-1/2" LONG ARDOX NAILS (TYP.)
10' - 4 1/2"
W6x25 STEEL WIND COLUMN
DIAGONAL BRACING TO BE APPLIED TO EXTERIOR SIDE OF WALL
2x6 SPF No.1/No.2 P.T LATERAL BRACE
2x6 SPF No.1/No.2 P.T STUDS @ 24" o/c (TYP.)
DOUBLE 2x8 BLOCK FASTENED BETWEEN STUDS AT BRACING LOCATIONS CONNECTED TO STUDS USING (8) 3-1/2" LONG ARDOX NAILS
PROVIDE RT3A BY USP (OR EQUAL) HOLD DOWN ANCHOR AT EACH STUD ATTACHING SILL TOP PLATE TO STUD WALL FRAMING WHERE THERE IS NO SHEATHING TO RESIST UPLIFT FORCES (TYP.)
1/2"
19' - 5 1/2" COLUMN ASSEMBLED LENGTH
19' - 4 1/2" COLUMN CUT LENGTH
t/o - MANURE STORAGE +106'-0"
ALL WELDED CONNECTIONS TO BE MADE USING 1/4" FILLET WELDS, ALL AROUND
INDICATES HTT5 SIMPSON STRONG TIE HOLD DOWN ANCHOR - FASTEN TO CONCRETE WALL USING 5/8"Ø THREADED ROD c/w 8" (min.) EMBEDMENT AND INSTALL USING EPOXY
FASTEN 2x6 LATERAL BRACE TO BLOCK AND BASE PLATE USING (15) - 3-1/2" ARDOX NAILS (TYP.)
FOUNDATION WALL
6' - 0"
9' - 4"
(2)-15M HAIRPINS 20'-0" LONG
THICKEN FLOOR SLAB TO 8" AT WIND COLUMN LOCATIONS. REINFORCE THICKENED SLAB WITH 6x6 6/6 WWM
8"
GRADE +100'-0"
3' - 4"
DRILL HOLE THROUGH WEB OF COLUMN @ 16" o/c TO ALLOW HORIZONTAL 15M REINFORCEMENT TO PASS THROUGH
14" LONG x 7" WIDE x 1/2" THICK STEEL BASE PLATE
(4) - 5/8"Ø EXPANSION ANCHORS. PROVIDE 6" (min.) EMBEDMENT
t/o - FOOTING +96'-8"

④ TYPICAL WIND COLUMN WC2 ELEVATION DETAIL
1/2" = 1'-0"

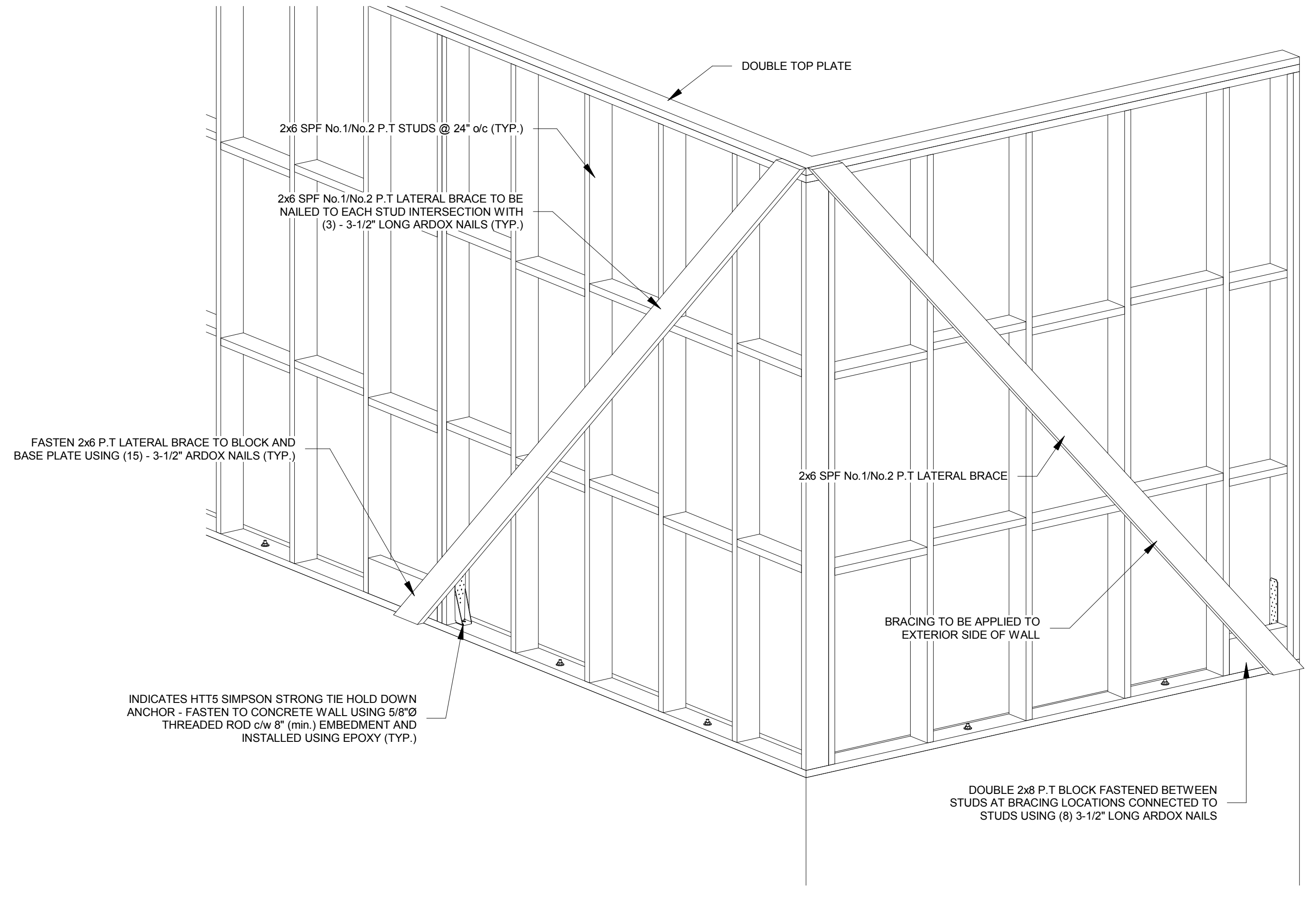
DOUBLE TOP PLATE
2x6 SPF No.1/No.2 P.T STUDS @ 24" o/c (TYP.)
2x6 SPF No.1/No.2 P.T LATERAL BRACE TO BE NAILED TO EACH STUD INTERSECTION WITH (3) - 3-1/2" LONG ARDOX NAILS (TYP.)
FASTEN 2x6 P.T LATERAL BRACE TO BLOCK AND BASE PLATE USING (15) - 3-1/2" ARDOX NAILS (TYP.)
2x6 SPF No.1/No.2 P.T LATERAL BRACE
BRACING TO BE APPLIED TO EXTERIOR SIDE OF WALL
INDICATES HTT5 SIMPSON STRONG TIE HOLD DOWN ANCHOR - FASTEN TO CONCRETE WALL USING 5/8"Ø THREADED ROD c/w 8" (min.) EMBEDMENT AND INSTALLED USING EPOXY (TYP.)
DOUBLE 2x8 P.T BLOCK FASTENED BETWEEN STUDS AT BRACING LOCATIONS CONNECTED TO STUDS USING (8) 3-1/2" LONG ARDOX NAILS

⑤ ISOMETRIC VIEW OF DIAGONAL WIND BRACING

NORTH

NOTES:

c/w	COMPLETE WITH
FDN	FOUNDATION
e/w	EACH WAY
EX.	EXISTING
H	HIGH/HORIZONTAL
max.	MAXIMUM
min.	MINIMUM
OBC	ONTARIO BUILDING CODE
o/c	ON CENTER
P.T.	PRESSURE TREATED
r/w	REINFORCED WITH
t/o	TOP OF
TYP.	TYPICAL
V	VERTICAL
W	WIDE
WWW	WELDED WIRE MESH

No.	REVISION DESCRIPTION	MM/DD/YY	CH'KD
1.	PRELIMINARY FOR DISCUSSION ONLY	05/07/25	TR
2.	REVISED FOR OWNER REVIEW	06/20/25	TR
3.	SITE PLAN - MINOR VARIANCE APPLICATION	07/10/25	TR
4.	ISSUED FOR APPROVAL	07/21/25	TR
5.	REVISED SITE PLAN	08/22/25	TR

CONTRACTOR

08/22/25
T. J. REGIER
100550036

CONSULTANT

MR ENGINEERING AND DESIGN LTD.
CIVIL • COMMERCIAL • AGRICULTURAL

145 Thames Road, West, Unit 4
Exeter, ON, N0M 1S3
Telephone: (519)-317-0128
Email: admin@mrengdesign.com

BRENAIR FARMS INC.
LAYER BARN

7189 PARKHOUSE DRIVE
MELBOURNE, ON
N0L 1T0

SECTIONS & DETAILS

PROJECT No. *MR25-027*

SHEET No. S-7

SCALE 1/2" = 1'-0"

DESIGN	TR
DRAWN	TR
CHECKED	TR
APPROVED	TR
DATE	AUGUST 2025

2024 ONTARIO BUILDING CODE

SECTION 2.1. GENERAL

2.1.1. SCOPE

2.1.1.1. SCOPE

(1) THIS PART IS CONCERNED WITH THE FIRE, STRUCTURAL, HEATING, VENTILATING AND AIR CONDITIONING PERFORMANCE OF FARM BUILDINGS, AS WELL AS PROCESSES AND OPERATIONS CARRIED OUT THEREIN THAT INVOLVE A RISK OF EXPLOSION, HIGH FLAMMABILITY OR RELATED CONDITIONS THAT CREATE A HAZARD TO LIFE SAFETY. (SEE NOTE A-2.1.1.1. (1))

2.1.2. APPLICATION

2.1.2.1. APPLICATION

(1) EXCEPT AS PROVIDED IN SENTENCES (2) AND (3), THIS PART APPLIES TO ALL FARM BUILDINGS
(a) THAT ARE
(i) MORE THAN 600 m² IN BUILDING AREA OR MORE THAN 3 STOREYS IN BUILDING HEIGHT USED FOR MAJOR OCCUPANCIES CLASSIFIED AS GROUP G, DIVISION 1, 2 OR 3 AGRICULTURAL OCCUPANCIES, OR

(ii) USED FOR MAJOR OCCUPANCIES CLASSIFIED AS GROUP G, DIVISION 4, AGRICULTURAL OCCUPANCIES WITH NO HUMAN OCCUPANTS, AND

(b) DESCRIBED IN SENTENCE 2.1.2.2. (1).

(2) SUBSECTIONS 2.2.6. AND 2.2.7. DO NOT APPLY TO GROUP G, DIVISION 4 MAJOR OCCUPANCIES.

(3) FARM BUILDINGS NOT DESCRIBED IN SENTENCE (1) SHALL CONFORM TO THE REQUIREMENTS OF ARTICLE 2.1.2.3.

2.1.2.2. CLASSIFICATION OF BUILDINGS CONTAINING AGRICULTURAL OCCUPANCIES (SEE NOTE A-3.1.2.)

(1) BUILDINGS OR PARTS OF BUILDINGS CONTAINING AN AGRICULTURAL OCCUPANCY THAT HAS AN OCCUPANT LOAD OF NOT MORE THAN ONE PERSON PER 40 m² SHALL BE CLASSIFIED ACCORDING TO THEIR MAJOR OCCUPANCY AS BELONGING TO GROUP G, DIVISION 1, 2, 3 OR 4.

(2) BUILDINGS OR PARTS OF BUILDINGS CONTAINING AN AGRICULTURAL OCCUPANCY THAT HAS AN OCCUPANT LOAD OF MORE THAN ONE PERSON PER 40 m² SHALL BE CLASSIFIED ACCORDING TO THEIR MAJOR OCCUPANCY AS BELONGING TO ONE OF THE GROUPS AND DIVISIONS LISTED IN TABLE 3.1.2.1. OF DIVISION B.

(3) FOR THE PURPOSES OF SENTENCES (1) AND (2), THE OCCUPANT LOAD SHALL BE DETERMINED BASED ON THE FLOOR AREA OR THE PART OF THE FLOOR AREA THAT CONTAINS THE AGRICULTURAL OCCUPANCY.

(4) A BUILDING INTENDED FOR USE BY MORE THAN ONE MAJOR OCCUPANCY SHALL BE CLASSIFIED ACCORDING TO ALL THE MAJOR OCCUPANCIES FOR WHICH IT IS USED OR INTENDED TO BE USED.

2.1.2.3. SMALL FARM BUILDINGS

(1) EXCEPT AS PROVIDED IN SENTENCES (2) TO (6), FARM BUILDINGS NOT MORE THAN 3 STOREYS IN BUILDING HEIGHT AND NOT MORE THAN 600 m² IN BUILDING AREA USED FOR MAJOR OCCUPANCIES CLASSIFIED AS GROUP G, DIVISION 1, 2, OR 3 AGRICULTURAL OCCUPANCIES SHALL CONFORM TO THE REQUIREMENTS IN THE CCBFC NRCC 38732 "NATIONAL FARM BUILDING CODE OF CANADA."

(2) ARTICLES 1.1.1.2. AND 3.1.8.1. AND SUBSECTIONS 3.1.4. AND 4.1.4. IN THE CCBFC NRCC 38732 "NATIONAL FARM BUILDING CODE OF CANADA" DO NOT APPLY TO FARM BUILDINGS.

(3) EXCEPT AS PROVIDED IN SENTENCE (4), IN THE CCBFC NRCC 38732 NATIONAL FARM BUILDING CODE OF CANADA, REFERENCES IN ARTICLES 1.1.1.3., 2.2.2.1., 2.2.2.2., 2.3.1.1., 2.3.2.1., 3. 1.1.1., 3.1.1.2., 3.1.2.1. AND 3.1.6.1. TO THE CCBFC NRCC 38726 "NATIONAL BUILDING CODE OF CANADA," ARE DEEMED TO BE REFERENCES TO ONTARIO REGULATION 403/97 (BUILDING CODE), AS IT READ ON DECEMBER 30, 2006.

(4) THE CLIMATIC VALUES REQUIRED FOR THE DESIGN OF FARM BUILDINGS SHALL BE IN CONFORMANCE WITH THE CLIMATIC VALUES PROVIDED IN MMAH SUPPLEMENTARY STANDARD SB-1, "CLIMATIC AND SEISMIC DATA."

(5) A FARM BUILDING OF LOW HUMAN OCCUPANCY HAVING A BUILDING AREA NOT EXCEEDING 600 m² AND NOT MORE THAN THREE STOREYS IN BUILDING HEIGHT IS DEEMED TO COMPLY WITH THE STRUCTURAL REQUIREMENTS OF CCBFC NRCC 38732 *NATIONAL BUILDING CODE OF CANADA," IF IT IS DESIGNED AND CONSTRUCTED IN CONFORMANCE WITH MMAH SUPPLEMENTARY STANDARD SB-11, "CONSTRUCTION OF FARM BUILDINGS."

(6) WHERE A FLOOR AREA OR PORTION OF A FLOOR AREA WITHIN A FARM BUILDING IS INTENDED TO CONTAIN A HAZARDOUS EXTRACTION OPERATION INVOLVING CANNABIS, THE FLOOR AREA OR PORTION OF THE FLOOR AREA SHALL CONFORM TO THE REQUIREMENTS OF ARTICLE 2.2.8.9.

2.1.3. DEFINITIONS

2.1.3.1. DEFINED TERMS

(1) WORDS THAT APPEAR IN ITALICS ARE DEFINED IN ARTICLE 1.4.1.2. OF DIVISION A.

2.1.4. CLASSIFICATION OF FARM BUILDINGS BY MAJOR OCCUPANCY (SEE NOTE A-3.1.2.)

2.1.4.1. CLASSIFICATION

(1) EVERY FARM BUILDING OR PART OF A FARM BUILDING SHALL BE CLASSIFIED ACCORDING TO ITS MAJOR OCCUPANCY AS BELONGING TO ONE OF THE DIVISIONS OF GROUP G DESCRIBED IN TABLE 2.1.4.1. (SEE NOTE A-2.1.4.1.(1)) (SEE ALSO NOTE A-2.2.8.3.)

TABLE 2.1.4.1 CLASSIFICATION OF AGRICULTURAL MAJOR OCCUPANCIES

GROUP G DIVISION 1
HIGH-HAZARD AGRICULTURAL OCCUPANCIES

GROUP G DIVISION 2
AGRICULTURAL OCCUPANCIES NOT ELSEWHERE CLASSIFIED IN GROUP G

GROUP G DIVISION 3
GREENHOUSE AGRICULTURAL OCCUPANCIES

GROUP G DIVISION 4
AGRICULTURAL OCCUPANCIES WITH NO HUMAN OCCUPANTS

A-2.1.3.1.(1) MAJOR OCCUPANCY CLASSIFICATIONS FOR FARM BUILDINGS.
THE FOLLOWING ARE EXAMPLES OF THE AGRICULTURAL MAJOR OCCUPANCY CLASSIFICATIONS DESCRIBED IN TABLE 2.1.4.1.:

GROUP G, DIVISION 1
- FARM BUILDINGS HOUSING LIVESTOCK WITH A BELOW-FLOOR STORAGE AREA
- FOR LIQUID MANURE
- FEED MILLS
- GRAIN ELEVATORS
- ROOMS FOR THE BULK STORAGE OF DANGEROUS GOODS CLASSIFIED AS FLAMMABLE GASES OR COMPRESSED GASES
- ROOMS FOR THE BULK STORAGE OF FLAMMABLE LIQUIDS
- ROOMS FOR THE BULK STORAGE OF REACTIVE MATERIALS

GROUP G, DIVISION 2
- ANIMAL EXERCISE FACILITIES
- ANIMAL HOUSING FACILITIES, INCLUDING, BUT NOT LIMITED TO, FACILITIES FOR LIVESTOCK, FACILITIES FOR ALTERNATIVE LIVESTOCK AN GAME ANIMALS, FACILITIES FOR FUR BEARING ANIMALS, AND FACILITIES FOR CULTURED FISH AND SHELLFISH
- ANIMAL TRAINING FACILITIES
- FACILITIES FOR THE PACKAGING AND PROCESSING OF AGRICULTURAL PRODUCTS
- FACILITIES FOR THE PRODUCTION OF PLANTS AND FUNGI, EXCLUDING GREENHOUSES
- FARM WORKSHOPS
- FEED PREPARATION CENTRES
- FEED STORAGE FACILITIES
- FRUIT AND VEGETABLE STORAGE FACILITIES
- GRAIN, FORAGE AND FEED STRUCTURES
- MILKING FACILITIES
- STORAGE FACILITIES FOR FARMING EQUIPMENT, IMPLEMENTS AND MACHINERY
- VINICULTURE FACILITIES

GROUP G, DIVISION 3
- GREENHOUSES

GROUP G, DIVISION 4
- BIOMASS FACILITIES
- BY-PRODUCT FACILITIES
- DIGESTERS
- GRAIN BINS
- HORIZONTAL SILOS
- STORAGE BINS
- VERTICAL SILOS

GENERAL NOTES:

1. THIS BUILDING IS DESIGNATED AGRICULTURAL, LOW HUMAN OCCUPANCY. OCCUPANCY LOAD IS BASED OFF OBC 2024 DEFINITION FOR "LOW HUMAN OCCUPANCY".

   PROPOSED BUILDING: 2,244.3m² (24,157 SQ.FT.)
2. ALL DIMENSIONS ARE IN IMPERIAL UNITS UNLESS NOTED OTHERWISE.
3. THESE PLANS AND SPECIFICATIONS WERE PREPARED FOR THE PURPOSES OF STRUCTURAL DESIGN ONLY. AS GENERAL CONTRACTOR, THE OWNER BEARS FULL RESPONSIBILITY FOR COORDINATION OF DESIGN, INCLUDING BUT NOT LIMITED TO MECHANICAL, ELECTRICAL, PLUMBING, VENTILATION SYSTEMS, SITE GRADING AND DRAINAGE.
4. THE CONTRACTOR IS TO CHECK AND VERIFY ALL DIMENSIONS ON THE STRUCTURAL DRAWINGS WITH OTHER DRAWINGS. ANY DISCREPANCIES OR ERRORS MUST BE REPORTED TO THE ENGINEER PRIOR TO COMMENCING WORK.
5. DO NOT SCALE DRAWINGS.
6. FEATURES OF CONSTRUCTION NOT FULLY SHOWN ARE OF THE SAME CHARACTER AS THOSE NOTED FOR SIMILAR CONDITIONS.
7. STRUCTURAL DESIGN IS BASED ON THE LATEST EDITION OF THE NATIONAL AND ONTARIO BUILDING CODE.
8. THE CONTRACTOR IS RESPONSIBLE FOR ARRANGING FOR THE INSPECTION OF STRUCTURAL REINFORCING AND STRUCTURAL STEEL FOR ALIGNMENT, BOLTS AND WELDED CONNECTIONS AND FOR THE PROMPT SUBMISSION OF ALL REPORTS TO THE PROJECT ENGINEER.
9. THE CONTRACTOR IS RESPONSIBLE TO PROVIDE ADEQUATE PROVISIONS FOR TEMPORARY BRACING DURING CONSTRUCTION TO RESIST THE APPLIED LOADS THAT ARE INDICATED IN THESE DRAWINGS AND SUBSEQUENT DRAWINGS BY OTHERS.
10. ALL WORK IS TO BE PERFORMED IN ACCORDANCE WITH THE OCCUPATIONAL HEALTH AND SAFETY ACT AND REGULATIONS FOR CONSTRUCTION PROJECTS.

EXCAVATION & BACKFILL

1. REMOVE ALL TOPSOIL AND DELETERIOUS MATERIAL FROM BELOW THE EXTENTS OF THE EXCAVATION.
2. SLOPE GRADE TO DRAIN AWAY FROM BUILDINGS.
3. FOUND FOOTINGS WHICH ARE EXPOSED TO FREEZING WEATHER A MINIMUM OF 4'-0" BELOW FINISHED GRADE UNLESS SPECIFIED OTHERWISE.
4. FOUND ALL FOOTINGS ON NATURALLY CONSOLIDATED, UNDISTURBED SOIL CAPABLE OF SAFELY SUSTAINING 150 kPa (3,133 psf) AT SERVICEABILITY LIMIT STATES (SLS) CORRESPONDING TO DENSE OR COMPACT SAND OR GRAVEL (TABLE 9.4.4.1. OBC).
5. GRANULAR FILL UNDER FOOTINGS SHALL BE FREE-DRAINING CLEAN GRANULAR "B" (OR BETTER) MATERIAL COMPACTED TO A MINIMUM 100% SPMDD. NO FILL SHALL BE PLACED UNDER FOOTINGS UNLESS MONITORED, INSPECTED AND APPROVED BY A QUALIFIED GEOTECHNICAL ENGINEER.
6. BACKFILL AND COMPACT FOUNDATION WALLS BELOW GRADE WITH MAXIMUM 2'-0" DIFFERENTIAL IN ELEVATION FROM ONE SIDE TO THE OTHER.
7. DO NOT BACKFILL FOUNDATION WALLS RETAINING EARTH ON ONE SIDE ONLY UNTIL THE FLOOR CONSTRUCTIONS AT BOTH THE TOP AND BOTTOM HAVE BEEN CAST AND HAVE ATTAINED 100% OF THEIR DESIGN STRENGTH.
8. NO FOOTINGS SHALL BE POURED UNTIL THE BUILDING DEPARTMENT HAS APPROVED THE FOUNDATION CONDITIONS.
9. ALL STANDING WATER SHALL BE REMOVED FROM THE FOUNDATION EXCAVATION PRIOR TO POURING CONCRETE.
10. ENGINEER TO BE NOTIFIED IF EXCESSIVE UNDERGROUND WATER IS ENCOUNTERED.

CONCRETE:

1. CONCRETE SHALL CONFORM TO CSA A23.1,2,3 FOR QUALITY CONTROL AND REBAR PLACEMENT.
2. REINFORCING STEEL:
   * CONFORM TO: CAN/CSA-G30.18-M92 CSA-G30.5-M1983
   * WELDED WIRE FABRIC SHALL HAVE A MINIMUM YIELD STRENGTH $fy = 448$ MPa (65,000psi)
   * REINFORCING STEEL SHALL HAVE A MINIMUM YIELD STRENGTH $fy = 400$ MPa (58,000psi)
3. ALL REINFORCING BARS SHALL BE SUPPORTED IN THE FORMS AND SPACED WITH STANDARD ACCESSORIES SO THAT THERE IS NO MOVEMENT DURING CONCRETE PLACEMENT.
4. REINFORCING IS TO BE GENERALLY PLACED IN ACCORDANCE WITH REINFORCING STEEL INSTITUTE OF CANADA "MANUAL OF STANDARD PRACTICE". ALL SPLICES SHALL BE CLASS "B" IN ACCORDANCE WITH THE FOLLOWING TABLE:

CONCRETE / REBAR SIZE	SPLICE LENGTH : mm (")			
	25MPa	30MPa	32MPa	35MPa
10M	400 (16")	400 (16")	400 (16")	400 (16")
15M	600 (24")	600 (24")	500 (20")	500 (20")
20M	800 (32")	700 (28")	700 (28")	700 (28")
25M	1200 (48")	1100 (44")	1100 (44")	1100 (44")

5. THE ABOVE TABLE ALSO APPLIES TO ALL DOWELS UNLESS NOTED OTHERWISE.
6. ALL HORIZONTAL BARS SHALL BE HOOKED 600mm (24") AROUND CORNERS UNLESS NOTED OTHERWISE.
7. PROVIDE 1-15M PER REINFORCEMENT LAYER OR CONCRETE LAYER AROUND ALL WINDOW, DOOR, MECHANICAL OR SIMILAR OPENINGS EXTENDING 24" (min.) BEYOND EACH CORNER OF THE OPENING.
8. THE CLEAR DISTANCE BETWEEN REINFORCING STEEL AND SURFACE OF CONCRETE SHALL BE AS FOLLOWS:

	EXPOSURE CLASS		
EXPOSURE CONDITION	N	F-1,F-2,S-1,S-2	C-XL.C-1,C-3,A-1,A-2,A-3
CAST AGAINST AND PERMANENTLY EXPOSED TO EARTH	---	75mm 3"	75mm 3"
BEAMS, GIRDERS, COLUMNS, AND PILES	30mm 1-1/4"	40mm 1-1/2"	50mm 2"
SLABS, WALLS, JOISTS, SHELLS, AND FOLDED PLATES	20mm 3/4"	40mm 1-1/2"	60mm 2-3/8"
RATIO OF COVER TO NOMINAL BAR DIAMETER	1.0	1.5	2.0
RATIO OF COVER TO NOMINAL MAXIMUM AGGREGATE SIZE	1.0	1.5	2.0

9. UNLESS OTHERWISE SPECIFIED BY THE OWNER, REINFORCEMENT SHALL BE PLACED WITHIN THE FOLLOWING TOLERANCES:
   a) CONCRETE COVER: +/-12mm (1/2") BUT NO LESS THAN 1/3 OF THE SPECIFIED MINIMUM COVER
   b) WHERE THE DEPTH OF THE FLEXURAL MEMBER, THICKNESS OF A WALL, OR THE SMALLEST DIMENSION OF A COLUMN IS
      i) 200mm (8") OR LESS: +/- 8mm (1/4")
      ii) LARGER THAN 200mm (8") BUT LESS THAN 600mm (24"): 12mm (1/2")
      iii) 600mm OR LARGER: +/-20mm (3/4")
   c) LATERAL SPACING OF BARS: +/-30mm (1-1/4")
   d) LONGITUDINAL LOCATION OF BENDS AND ENDS OF BARS: +/-50mm (2")
   e) LONGITUDINAL LOCATION OF BENDS AND ENDS AT DISCONTINUOUS ENDS OF MEMBERS: +/- 20mm (3/4")
10. ALL REINFORCING STEEL IN PLACE TO BE MADE AVAILABLE FOR INSPECTION BY ENGINEER BEFORE POURING THE CONCRETE. ENGINEER TO BE NOTIFIED WELL IN ADVANCE OF POURING SCHEDULE. ENGINEER TO CARRY OUT INSPECTION AT HIS DISCRETION.
11. ALL GRIT, MUD AND DEBRIS SHALL BE REMOVED FROM THE REINFORCING STEEL PRIOR TO THE PLACEMENT OF CONCRETE.
12. PROVIDE PORTLAND CEMENT OF CANADIAN MANUFACTURE CONFORMING WITH CSA/CAN 3-A5, TYPE 10.
13. CONTROL JOINTS IN SLABS ON GRADE SHALL BE 1/4 THE THICKNESS OF THE SLAB. SPACING OF THE CONTROL JOINTS IN SLABS ON GRADE SHALL NOT EXCEED THE GREATER OF 30 TIMES THE THICKNESS OF THE SLAB OR 15'-0".
14. PROVIDE CLEAN, UNCOATED SAND AND COARSE AGGREGATES FROM APPROVED SOURCES WHICH CONFORM WITH CSA/CAN 3-A2M. REFER TO THE CONCRETE SPECIFICATIONS PROVIDED BELOW FOR AGGREGATE SIZE.
15. PROVIDE PLASTICIZER OF WATER REDUCING ADD MIXTURE WHERE INCREASED WORKABILITY IS REQUIRED. **DO NOT ADD WATER ON-SITE.**
16. USE HIGH FREQUENCY VIBRATION TO PLACE ALL CONCRETE.
17. ALL CONCRETE SHALL HAVE A 3" SLUMP +/-1".
18. TAKE ADEQUATE MEASURES TO PROTECT CONCRETE FROM EXPOSURE TO FREEZING TEMPERATURES AT LEAST SEVEN DAYS AFTER CONCRETE PLACEMENT.
19. ALL CONCRETE SHALL BE TESTED BY A CSA CERTIFIED CONCRETE TESTING LABORATORY.

    i) CURING TYPE 1 - 3 DAYS @ 10℃ TO ATTAIN 40% OF THE SPECIFIED STRENGTH.

    ii) CURING TYPE 2 - 7 DAYS @ 10℃ TO ATTAIN 70% OF THE SPECIFIED STRENGTH.

    iii) CURING TYPE 3 - A WET CURING PERIOD OF 7 DAYS.
20. **CONCRETE SPECIFICATIONS**

DESCRIPTION	CLASS OF CONCRETE	STRENGTH @ 28 DAYS	W/CM RATIO	AIR ENTRAINMENT	CURING TYPE	AGGREGATE
THICKENED SLAB AND SPREAD FOOTINGS WITHIN MANURE TRANSFER PIT	A-2	32MPa	0.45	5-8%	2	14-20mm
MANURE TRANSFER PIT FLOOR	A-2	32MPa	0.45	5-8%	2	14-20mm
MANURE TRANSFER PIT WALLS	A-2	32MPa	0.45	5-8%	2	14-20mm
SLAB OVER MANURE TRANSFER PIT	A-1	35MPa	0.40	5-8%	2	14-20mm
FOOTINGS NOT EXPOSED TO MANURE	N	20MPa	N/A	N/A	1	14-20mm
FOUNDATION WALLS / CURBS	A-4	25MPa	0.55	4-7%	1	14-20mm
INTERIOR FLOORS NOT EXPOSED TO MANURE	A-4	25MPa	0.55	4-7 %	1	14-20mm
EXTERIOR SLAB ON GRADE (EXPOSED TO MANURE AND SALT)	A-2	32MPa	0.45	5-8%	2	14-20mm

LUMBER:

1. LUMBER SHALL BE No. 2 GRADE SPECIES SPF OR BETTER UNLESS NOTED OTHERWISE.
2. ALL POSTS SHALL BE No.1 GRADE SPECIES SPF OR BETTER UNLESS NOTED OTHERWISE.
3. ALL WOOD IN CONTACT WITH CONCRETE OR SOIL/EARTH SHALL BE PRESSURE TREATED.
4. ALL PLYWOOD SHALL CONFORM TO CSA STANDARD 0121 OR 0151.
5. ALL OSB SHALL CONFORM TO CSA O325 CONSTRUCTION SHEATHING OR CSA O437.0 WAFERBOARD WITH MINIMUM PANEL MARK FOR 0325 OSB 1R24/2F16.
6. ALL NAILS/FASTENERS USED WITH PRESSURE TREATED LUMBER SHALL BE GALVANIZED OR ACQ QUALIFIED.
7. ALL MANUFACTURED CONNECTORS/HARDWARE TO BE GALVANIZED.
8. ALL NAILING SHALL BE AS PER NBCC/OBC UNLESS NOTED OTHERWISE. NAILS AND SPIKES SHALL CONFORM TO THE CSA STANDARD B111 "WIRE NAILS, SPIKES AND STAPLES".
9. ALL BOLTS USED FOR WOOD CONNECTIONS SHALL BE A307 (min.). WHERE BOLTS ARE EXPOSED TO CORROSIVE ENVIRONMENTS, A307 (min.) HOT DIPPED GALVANIZED BOLTS, NUTS, WASHERS SHALL BE USED.
10. STUD WALLS SHALL BE ANCHORED TO THE FOUNDATION 1/2"Ø ANCHOR BOLTS SPACED AS INDICATED ON THE DRAWINGS

TRUSSES:

1. THE ROOF TRUSSES ARE TO BE DESIGNED FOR THE SPECIFIED LOADS. THE SUPPLIER IS TO PROVIDE ERECTION AND MEMBER FABRICATION DRAWINGS STAMPED BY A PROFESSIONAL ENGINEER LICENSED IN THE PROVINCE OF ONTARIO. THE DRAWINGS MUST INDICATE DESIGN LOADS, TIMBER SPECIES, GRADES, BRACING AND CONNECTORS. ALL TRUSSES MUST BE ANCHORED WITH APPROPRIATE TIE-DOWN METAL ANCHORS TO RESIST UPLIFT AS CALCULATED AND SHOWN IN THE TRUSS DESIGN CALCULATIONS AND TRUSS DRAWINGS.
2. THE BEARING SHOWN ON THE DRAWINGS IS THE MAXIMUM WIDTH TO BE PROVIDED AND THE TRUSS MANUFACTURER MUST DESIGN THE TRUSSES TO SUIT THE BEARING WIDTH AND CONDITIONS.
3. ALL PERMANENT BRACING FOR TRUSSES SHALL BE SECURELY ANCHORED BY BACK BRACING DIAGONALLY OR ATTACHING TO END WALLS ACCORDING TO GUIDELINES PUBLISHED BY THE CANADIAN WOOD TRUSS ASSOCIATION.
4. UNBALANCED LOADING CONDITIONS SHALL BE INCLUDED IN THE TRUSS DESIGN.
5. TRUSS DESIGNER TO ACCOUNT FOR INCREASE SNOW LOADS DUE TO ROOF VALLEYS AND SNOW SHADOWS/DRIFTING. TRUSS SUPPLIER TO VISIT THE SITE TO DETERMINE SNOW SHADOW CONDITIONS AND COMMUNICATE THIS INFORMATION TO THE TRUSS ENGINEER.
6. TRUSS SHOP DRAWINGS SHALL BE PROVIDED TO THE ENGINEER TO REVIEW PRIOR TO FABRICATION. DESIGN LOADS AND ASSUMPTIONS SHALL BE NOTED ON THE SHOP DRAWINGS.
7. DUE TO THE NATURE OF AGRICULTURAL BUILDINGS AND EXPOSURE TO HIGH MOISTURE ENVIRONMENTS AND MANURE GASES, IT IS RECOMMENDED THAT A PROTECTIVE COATING BE APPLIED TO THE STEEL TRUSS PLATES. FURTHER, REGULAR INSPECTIONS OF THE TRUSS PLATES IS ALSO RECOMMENDED AND RE-APPLICATION OF PROTECTIVE COATINGS BE APPLIED DURING THESE INSPECTIONS IF REQUIRED.

STRUCTURAL STEEL:

1. STRUCTURAL STEEL SHALL CONFORM TO THE REQUIREMENTS OF CSA SPECIFICATIONS S16.1 (LATEST EDITION) AND CSA SPECIFICATIONS G40.20 AND G40.21, TYPE 350W (LATEST EDITION) FOR BEAMS AND 350W FOR HSS (CLASS C).
2. BOLTED CONNECTIONS SHALL BE MADE USING FRICTION TYPE CONNECTION AND HIGH TENSILE STRENGTH BOLTS (A325 min.). WHERE BOLTS ARE EXPOSED TO CORROSIVE ENVIRONMENTS, A325 (min.) HOT DIPPED GALVANIZED BOLTS, NUTS, WASHERS SHALL BE USED.
3. STRUCTURAL STEEL FABRICATOR TO BE CERTIFIED BY THE CANADIAN WELDING BUREAU.
4. THE WELDING SHALL CONFORM TO THE REQUIREMENTS OF CSA STANDARD W59 (LATEST EDITION) AND THE WELDING COMPANY AND WELDERS SHALL BE QUALIFIED UNDER THE REQUIREMENTS OF CSA STANDARD W57 (LATEST EDITION) FOR THE APPROPRIATE POSITION.
5. STEEL SHALL BE THOROUGHLY CLEANED AND HOT DIPPED GALVANIZED. AREAS AFFECTED BY WEATHERING, DAMAGE DUE TO HANDLING ETC., SHALL HAVE THE RUST REMOVED AND BE "TOUCHED UP" IN THE FIELD.
6. NO SPLICES IN BEAMS AND COLUMNS WILL BE ALLOWED WITHOUT WRITTEN APPROVAL OF THE ENGINEER. BUTT WELDS IN SPLICES AND MOMENT CONNECTIONS MUST BE ULTRASONICALLY TESTED OR X-RAYED AND PASSED BY AN INDEPENDENT TESTING COMPANY.
7. DO NOT CUT OPENINGS IN STRUCTURAL STEEL MEMBERS WITHOUT THE ENGINEER'S APPROVAL.
8. THE CONTRACTOR/STEEL SUPPLIER SHALL PROVIDE AND REMOVE AFTERWARDS ALL TEMPORARY BRACING NECESSARY TO KEEP THE STRUCTURE TRUE AND PLUMB. ALL TEMPORARY BRACING SHALL ACCOUNT FOR CONSTRUCTION AND ENVIRONMENTAL LOADS DURING CONSTRUCTION.
9. CONTRACTOR TO VERIFY SITE MEASUREMENTS PRIOR TO FABRICATION OF STEEL.

MANURE PIT (STORAGE & HANDLING):

1. IN ACCORDANCE WITH THE NUTRIENT MANAGEMENT ACT AND "CONSTRUCTING A PERMANENT CONCRETE OR STEEL LIQUID NUTRIENT STORAGE FACILITY FOR ASM (AGRICULTURAL SOURCE MATERIAL)" FACTSHEET ORDER NUMBER 12-063, A SITE CHARACTERIZATION/INVESTIGATION SHALL BE COMPLETED BY A QUALIFIED GEOSCIENTIST OR PROFESSIONAL ENGINEER.
2. ALL MANURE STORAGE FACILITIES AND TRANSFER SYSTEMS TO BE DESIGNED AND CONSTRUCTED USING NOT LESS THAN A-2 CONCRETE, 32MPa THROUGHOUT.
3. ALL CONNECTIONS IN A LIQUID TRANSFER SYSTEM MUST BE INSTALLED USING SPECIFICALLY DESIGN FITTINGS AND GASKETS THAT ARE COMPATIBLE WITH THE PIPE MATERIAL.
4. TO OBTAIN A BUILDING PERMIT FOR THE CONSTRUCTION OF A PERMANENT LIQUID NUTRIENT STORAGE FACILITY MADE OF CONCRETE, A NUTRIENT MANAGEMENT STRATEGY (NMS), SHALL BE PREPARED BY A CERTIFICATE HOLDER UNDER PART X OF THE REGULATION AND APPROVED BY OMAF. THE OWNERS AND THEIR NUTRIENT MANAGEMENT CONSULTANT SHALL PREPARE THE NMS AND SUBMIT WITH THE APPLICATION PACKAGE.
5. PRIOR TO CONSTRUCTING THE PERMANENT NUTRIENT STORAGE FACILITY, ALL WEEPING/FIELD TILE SHALL BE LOCATED, INTERCEPTED AND DISCONNECTED A MINIMUM OF 15m (50') FROM THE PERIMETER OF THE BARN FOUNDATION WALLS IN ACCORDANCE WITH O.REG 267/03 S.63. ALL MUNICIPAL DRAINS WITHIN 15m (50') OF THE PROPOSED PERMANENT NUTRIENT STORAGE FACILITY SHALL BE LOCATED AND REDIRECTED AWAY FROM THE FACILITY.
6. A PERSON WHO, ON OR AFTER THE DAY ON WHICH O.REG 267/03 REQUIRES AN OPERATION TO HAVE AN NMS OR NUTRIENT MANAGEMENT PLAN, CONSTRUCTS OR EXPANDS, WITHIN 15m (50') OF A PERMANENT NUTRIENT STORAGE FACILITY, A DRAINAGE SYSTEM THAT IS USED IN THE COURSE OF THE OPERATION AND IS INTENDED TO COLLECT WATER AND DIVERT IT AWAY FROM THE FACILITY SHALL ENSURE THAT AT LEAST ONE OF THE FOLLOWING CONDITIONS IS MET:

   1. THE SYSTEM IS CONSTRUCTED WITH NON-PERFORATED PIPE AND ALL SUBSURFACE JOINTS IN THE PIPING ARE PROPERLY SEALED
   2. ALL WATER COLLECTED BY THE DRAINAGE SYSTEM DISCHARGES INTO A TREATMENT SYSTEM
   3. THE FOUNDATION DRAINS OF THE PERMANENT NUTRIENT MANAGEMENT STORAGE FACILITY ARE EQUIPPED WITH AN OBSERVATION AND SHUT OFF STATION (O.REG 338/09 S.48.)
7. SITING REQUIREMENTS AS PER THE NUTRIENT MANAGEMENT ACT 2002 O.REG 267/03 S.63 TO BE VERIFIED BY OTHERS.
8. ALL PIPES ENTERING A LIQUID NUTRIENT STORAGE FACILITY MUST HAVE A FLEXIBLE WATERTIGHT GASKET OR MEMBRANE INSTALLED BETWEEN THE PIPE AND THE FLOOR OR WALL OF THE STORAGE FACILITY TO SERVE AS AN ANTI-SEEPAGE COLLAR.
9. ANY TRANSFER SYSTEM HAVING AN OPPORTUNITY TO BACKFLOW TO THE PUMP OR PUMP-OUT CHAMBER MUST HAVE BOTH A PRIMARY AND SECONDARY SHUTOFF VALVE.
10. ALL COVERED STORAGE SYSTEMS MUST HAVE A VENTILATION SYSTEM THAT IS EITHER A POWERED SYSTEM OR A NATURAL SYSTEM TO PREVENT THE ACCUMULATION OF CORROSIVE OR NOXIOUS GASES IN ACCORDANCE WITH O.REG 267/03 S.78.
11. A SIGN INDICATING THE DANGER DUE TO NOXIOUS GASES SHALL BE INSTALLED AT EVERY ACCESS TO A LIQUID NUTRIENT STORAGE FACILITY OR UNDER FLOOR MANURE TRANSFER CHAMBER.
12. LIQUID NUTRIENT STORAGE FACILITY TO HAVE A PERMANENT SAFETY FENCE EXTENDING A MINIMUM OF 5' ABOVE SURROUNDING GRADE OR FLOOR LEVEL, SECURELY FASTENED AT GROUND LEVEL COMPLETE WITH AN LOCKABLE GATE TO DETER ACCESS. NO PERMANENT LADDERS SHALL BE INSTALLED AT PUMP OUT LOCATIONS TO DETER ACCESS.
13. THE SIZE OF THE LIQUID NUTRIENT STORAGE FACILITY UNDER THE BARN HAS NOT BEEN DETERMINED BY MR ENGINEERING AND DESIGN LTD. IT IS THE RESPONSIBILITY OF THE OWNER AND/OR THE OWNER'S NUTRIENT MANAGEMENT CONSULTANT TO ENSURE THE STORAGE FACILITY IS ADEQUATELY SIZED. THE OWNER AND/OR THE OWNER'S NUTRIENT MANAGEMENT CONSULTANT ARE RESPONSIBLE FOR DESIGNING THE SECONDARY CONTAINMENT, SHOULD SECONDARY CONTAINMENT BE REQUIRED.

SITE REVIEW - BARN ADDITION:

1. THE CONTRACTOR/OWNER SHALL CONTACT THE LOCAL MUNICIPAL BUILDING DEPARTMENT TO PERFORM SITE REVIEWS OF CONSTRUCTION IN ACCORDANCE WITH OBC DIVISION C SECTION 1.3.5.
2. IN ACCORDANCE WITH OBC DIVISION C SECTION 1.2.2.1. THE CONTRACTOR/OWNER SHALL RETAIN THE SERVICES OF A PROFESSIONAL ENGINEER TO PERFORM A GENERAL REVIEW TO ENSURE THAT THE CONSTRUCTION IS IN GENERAL CONFORMITY WITH THE PLANS.
3. THE FOLLOWING INSPECTIONS SHALL BE REQUIRED:

   a) FOOTINGS - WHEN THE CONCRETE FORMWORK AND REINFORCING STEEL HAVE BEEN SET AND ARE READY FOR THE PLACEMENT OF CONCRETE

   b) FOUNDATION WALLS - WHEN THE CONCRETE FORMWORK AND REINFORCING STEEL HAVE BEEN SET AND ARE READY FOR THE PLACEMENT OF CONCRETE

   c) FRAMING INSPECTION - WHEN THE BUILDING HAS BEEN COMPLETELY FRAMED, PRIOR TO INSTALLING INTERIOR OR EXTERIOR SHEATHING THAT WOULD PREVENT A VISUAL INSPECTION OF KEY FRAMING COMPONENTS

   d) TRUSS INSPECTION - WHEN THE TRUSSES AND ASSOCIATED BRACING HAVE BEEN COMPLETED, PRIOR TO INSTALLING CEILING FINISHES

   e) FINAL REVIEW - WHEN THE STRUCTURAL COMPONENTS OF THE FACILITY HAVE BEEN COMPLETED
4. THE CONTRACTOR/OWNER TO NOTIFY THE ENGINEER @ 519-317-0128. ADEQUATE NOTICE IS ANTICIPATED AND EXPECTED.

FARM / EQUIPMENT NOTES:

1. ALL WORK TO BE CARRIED OUT IN ACCORDANCE WITH THE LATEST EDITIONS OF THE ONTARIO BUILDING CODE
2. MECHANICAL, HEATING AND VENTILATION CONTROLLER SYSTEM DESIGN BY OTHERS.
3. ELECTRICAL DESIGN BY OTHERS.
4. ALL OPENINGS REQUIRED AS EXITS ARE TO BE CLEARLY VISIBLE AND VISIBLY MARKED AS EXITS.
5. THESE PLANS AND SPECIFICATIONS WERE PREPARED FOR THE PURPOSES OF STRUCTURAL DESIGN. AS GENERAL CONTRACTOR, THE OWNER BEARS FULL RESPONSIBILITY FOR COORDINATION OF DESIGN, INCLUDING BUT NOT LIMITED TO MECHANICAL, ELECTRICAL, PLUMBING, VENTILATION SYSTEMS, SITE GRADING AND DRAINAGE.

DESIGN INFORMATION:

BUILDING IMPORTANCE:	LOW (FARM BUILDING)
Is (SLS)	0.90
Is (ULS)	0.80
Iw (SLS)	0.75
Iw (ULS)	0.80
Ie (ULS)	0.80
Ie (SLS)	NBCC 2020 STRUCTURAL COMMENTARIES J

SB-1 LOCATION (STRATHROY, ON - 12km+/- FROM BUILDING LOCATION)
BUILDING LOCATION (7189 PARKHOUSE DRIVE, MELBOURNE ON.)

ROOF
LIVE LOAD

SNOW (Ss)	1.9 kPa (39.7 psf)
RAIN (Sr)	0.4 kPa (8.4 psf)
Cb	0.8
Cw	1.0
Cs (4/12 SLOPE)	0.78
Ca (4/12 SLOPE)	1.17
BALANCED SPECIFIED SNOW LOAD (S) =Is [(Ss x Cb x Cw x Ca x Cs) + Sr] = 0.9[(1.9 x 0.8 x 1.0 x 1.0 x 0.78) + 0.4]	1.43 kPa (29.8 psf)
UNBALANCED SPECIFIED SNOW LOAD (S) = Is [(Ss x Cb x Cw x Ca x Cs) + Sr] = 0.9[(1.9 x 0.8 x1.0 x 1.17 x 1.0) +0.4]	1.96 kPa (41.0 psf)

TRUSS DESIGN DEAD LOADS

TOP CHORD DEAD LOAD	0.20 kPa (4.0 psf)
BOTTOM CHORD DEAD LOAD	0.35 kPa (7.0 psf)
	0.55 kPa (11.0 psf)

WIND PRESSURE

q 1/50 YEAR	0.47kPa (9.8 psf)
WIND DESIGN CATEGORY	CATEGORY 3
TERRAIN	OPEN
NET WIND UPLIFT	0.92 kPa (19.2 psf)
NET UNBALANCED UPLIFT	0.37 kPa (8.2 psf)

SEISMIC DATA

Sa (0.2) (2020 NBCC SEISMIC HAZARD TOOL)	0.228
IeSa(0.2) < 0.2 = (0.8 x 0.228)	0.182
SEISMIC CATEGORY	SC1
SITE CLASSIFICATION (ASSUMED)	D
R_dR_o = 1.5x1.3 (CONCRETE SHEAR WALLS)	1.95
R_dR_o = 3 X 1.7 (PLYWOOD SHEAR WALLS)	5.1

TRUSS DESIGNER/SUPPLIER, CONTRACTOR AND OWNER SHALL COORDINATE ADDITIONAL LOADS REQUIRED FOR MECHANICAL EQUIPMENT.

NOTE: ALL DESIGN LOADS ARE UNFACTORED

ITEM	ONTARIO BUILDING CODE DATA MATRIX PART 2	2024 OBC REFERENCE
1	BRENAIR FARMS INC. LAYER BARN 7189 PARKHOUSE DRIVE MELBOURNE, ON ■ NEW ☐ ADDITION ☐ ALTERATION ☐ CHANGE OF USE	ALL REFERENCES ARE TO DIVISION B OF THE OBC UNLESS PRECEDED BY [A] FOR DIVISION A, OR BY [C] FOR DIVISION C. ■ PART 2
2	MAJOR OCCUPANCY(S) AGRICULTURAL OCCUPANCIES NOT ELSEWHERE CLASSIFIED IN GROUP G AGRICULTURAL OCCUPANCIES WITH NO HUMAN OCCUPANTS	2.1.4.1.
3	BUILDING AREA (m²) EXISTING 0 NEW 2,244.3 TOTAL 2,244.3	[A] 1.4.1.2
4	GROSS AREA (m²) EXISTING 0 NEW 2,244.3 TOTAL 2,244.3	[A] 1.4.1.2
5	NUMBER OF STOREY(S) ABOVE GRADE 1 BELOW GRADE 0	2.2.2.2 & [A] 1.4.1.2
6	BUILDING CLASSIFICATION GROUP G, DIVISION 2 - 2.2.2.6, GROUP G, DIVISION 4 - 2.2.2.8	2.2.2.3-.8
7	SPRINKLER SYSTEM PROPOSED ☐ ENTIRE BUILDING ■ NOT REQUIRED	2.2.2.3-.8
8	FIRE ALARM REQUIRED ☐ YES ■ NO	2.2.3
9	PERMITTED CONSTRUCTION ■ COMBUSTIBLE ☐ NON-COMBUSTIBLE ACTUAL CONSTRUCTION ☐ COMBUSTIBLE ☐ NON-COMBUSTIBLE ■ BOTH	2.2.2.3.-.8
10	MEZZANINE(S) AREA (m²) N/A	2.2.2.2
11	OCCUPANCY BASED ON ■ m²/PERSON ☐ DESIGN OF BUILDING BUILDING OCCUPANT LOAD: LOAD: 40m² / PERSON - SEE NOTE 1. TOTAL LOAD: 41 PERSONS	2.1.2.2.(1) & 2.2.1.17
12	HAZARDOUS SUBSTANCES ☐ YES ■ NO	2.2.8
13	REQUIRED FIRE RESISTANCE RATING (FRR) HORIZONTAL ASSEMBLIES FRR (HOURS) — LISTED DESIGN No. OR DESCRIPTION (SB-2) FLOORS N/A HOURS — N/A ROOF N/A HOURS — N/A MEZZANINE N/A HOURS — N/A FRR OF SUPPORTING MEMBERS (HOURS) — LISTED DESIGN No. OR DESCRIPTION (SB-2) FLOORS N/A HOURS — N/A ROOF N/A HOURS — N/A MEZZANINE N/A HOURS — N/A	2.2.2.3-.8
14	FIRE SEPARATIONS	
	SERVICE ROOMS ☐ 0.5-HR ☐ 0.75-HR ☐ 1-HR ☐ 1.5-HR ☐ 2-HR	2.2.1.9.(1)
	INCINERATOR ROOMS ☐ 0.5-HR ☐ 0.75-HR ☐ 1-HR ☐ 1.5-HR ☐ 2-HR	2.2.1.9.(3)
	CROP DRYING ROOMS ☐ 0.5-HR ☐ 0.75-HR ☐ 1-HR ☐ 1.5-HR ☐ 2-HR	2.2.1.9.(4)
	REPAIRING FARM MACHINERY ☐ 0.5-HR ☐ 0.75-HR ☐ 1-HR ☐ 1.5-HR ☐ 2-HR	2.2.1.9.(5)
	DANGEROUS GOODS ☐ 0.5-HR ☐ 0.75-HR ☐ 1-HR ☐ 1.5-HR ☐ 2-HR	2.2.1.9.(6)
	DIFFERENT OCCUPANCIES ☐ 0.5-HR ☐ 0.75-HR ☐ 1-HR ☐ 1.5-HR ☐ 2-HR	2.2.1.4

NOTE:

1. OCCUPANT LOAD IS BASED ON GROUP G DIVISION 2 AREA ONLY
GROUP G DIVSION 2 AREA: 1,679.1 m²
GROUP G DIVISION 4 AREA: 565.2 m²
GROSS AREA: 2,244.3 m²

NORTH

NOTES:

c/w	COMPLETE WITH
FDN	FOUNDATION
e/w	EACH WAY
EX.	EXISTING
H	HIGH/HORIZONTAL
max.	MAXIMUM
min.	MINIMUM
OBC	ONTARIO BUILDING CODE
o/c	ON CENTER
P.T.	PRESSURE TREATED
r/w	REINFORCED WITH
t/o	TOP OF
TYP.	TYPICAL
V	VERTICAL
W	WIDE
WWW	WELDED WIRE MESH

No.	REVISION DESCRIPTION	MM/DD/YY	CH'KD
1.	PRELIMINARY FOR DISCUSSION ONLY	05/07/25	TR
2.	REVISED FOR OWNER REVIEW	06/20/25	TR
3.	SITE PLAN - MINOR VARIANCE APPLICATION	07/10/25	TR
4.	ISSUED FOR APPROVAL	07/21/25	TR
5.	REVISED SITE PLAN	08/22/25	TR

CONTRACTOR

LICENSED PROFESSIONAL ENGINEER
08/22/25
T. J. REGIER
100550036
PROVINCE OF ONTARIO

CONSULTANT

MR
ENGINEERING AND DESIGN LTD.
CIVIL•COMMERCIAL•AGRICULTURAL

145 Thames Road, West, Unit 4
Exeter, ON, N0M 1S3
Telephone: (519)-317-0128
Email: admin@mrengdesign.com

BRENAIR FARMS INC.
LAYER BARN

7189 PARKHOUSE DRIVE
MELBOURNE, ON
N0L 1T0

GENERAL NOTES - OBC MATRIX

DESIGN	TR
DRAWN	TR
CHECKED	TR
APPROVED	TR
DATE	AUGUST 2025

PROJECT No.
MR25-027

SHEET No.
S-8

SCALE
12" = 1'-0"

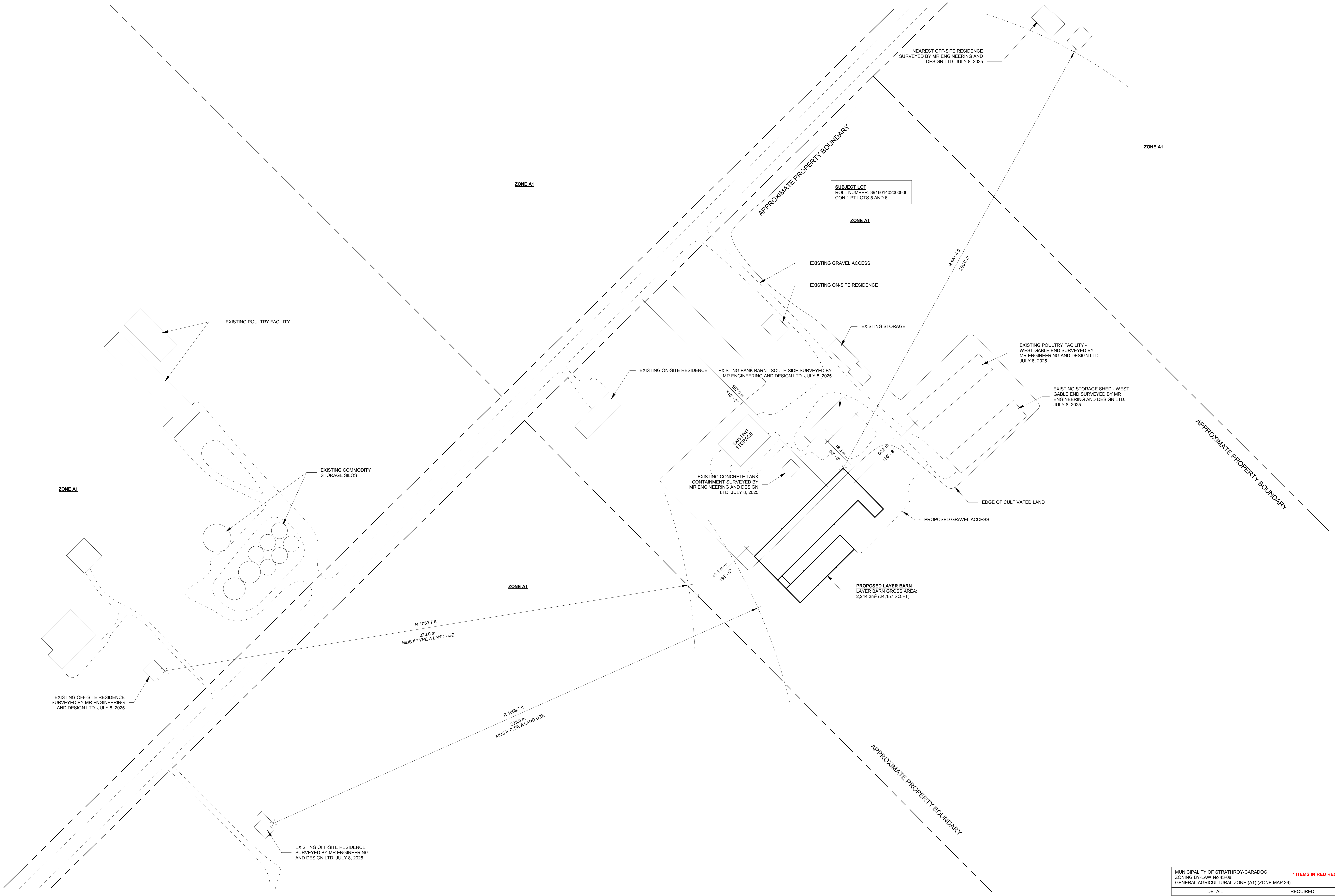
NEAREST OFF-SITE RESIDENCE SURVEYED BY MR ENGINEERING AND DESIGN LTD. JULY 8, 2025
APPROXIMATE PROPERTY BOUNDARY
ZONE A1
SUBJECT LOT
ROLL NUMBER: 391601402000900
CON 1 PT LOTS 5 AND 6
ZONE A1
ZONE A1
R 951.4 ft
290.0 m
EXISTING GRAVEL ACCESS
EXISTING ON-SITE RESIDENCE
EXISTING STORAGE
EXISTING POULTRY FACILITY
EXISTING POULTRY FACILITY - WEST GABLE END SURVEYED BY MR ENGINEERING AND DESIGN LTD. JULY 8, 2025
EXISTING ON-SITE RESIDENCE
EXISTING BANK BARN - SOUTH SIDE SURVEYED BY MR ENGINEERING AND DESIGN LTD. JULY 8, 2025
EXISTING STORAGE SHED - WEST GABLE END SURVEYED BY MR ENGINEERING AND DESIGN LTD. JULY 8, 2025
157.0 m
515' - 2"
EXISTING STORAGE
18.3 m
60' - 0"
50.8 m
166' - 8"
APPROXIMATE PROPERTY BOUNDARY
EXISTING COMMODITY STORAGE SILOS
EXISTING CONCRETE TANK CONTAINMENT SURVEYED BY MR ENGINEERING AND DESIGN LTD. JULY 8, 2025
EDGE OF CULTIVATED LAND
ZONE A1
PROPOSED GRAVEL ACCESS
41.1 m +/-
135' - 0"
ZONE A1
PROPOSED LAYER BARN
LAYER BARN GROSS AREA: 2,244.3m² (24,157 SQ.FT)
R 1059.7 ft
323.0 m
MDS II TYPE A LAND USE
EXISTING OFF-SITE RESIDENCE SURVEYED BY MR ENGINEERING AND DESIGN LTD. JULY 8, 2025
R 1059.7 ft
323.0 m
MDS II TYPE A LAND USE
APPROXIMATE PROPERTY BOUNDARY
EXISTING OFF-SITE RESIDENCE SURVEYED BY MR ENGINEERING AND DESIGN LTD. JULY 8, 2025

① SITE LOCATION PLAN
1" = 100'-0"

MUNICIPALITY OF STRATHROY-CARADOC
ZONING BY-LAW No.43-08
GENERAL AGRICULTURAL ZONE (A1) (ZONE MAP 26)

*** ITEMS IN RED REQUIRE RELIEF FROM ZONING BY-LAW ***

DETAIL	REQUIRED	PROPOSED
LOT AREA	40 ha (min.)	60.23 ha +/-
FRONTAGE	150 m (min.)	300 m +/-
FRONT YARD	20 m (min.)	157 m +/-
SIDE YARD	15 m (min.)	41 m +/-
REAR YARD	30 m (min.)	> 30 m
LOT COVERAGE	20 % (max.)	< 1%
DRILLED WELL	15 m (min.)	TBD
DUG WELL	30 m (min.)	---
FIELD TILE	15 m (min.)	SITE REPAIR
MINIMUM DISTANCE SEPARATION	323 m (min.) TYPE A LAND USE	**290 m (33 m OF RELIEF)**

CONCESSION 1 PT LOTS 5 AND 6
IN THE GEOGRAPHIC TOWNSHIP OF CARADOC
MUNICIPALITY OF STRATHROY - CARADOC
COUNTY OF MIDDLESEX

NOTES:

1. ALL EXISITING FEATURES ARE APPROXIMATE AND ARE BASED OFF OF GIS AND DATA SATELLITE IMAGERY UNLESS NOTED OTHERWISE ON THIS DRAWING.
2. SITE SKETCH IS CONCEPTUAL. FINAL SITING BY OTHERS.
3. THIS IS NOT A LEGAL SURVEY.

NORTH

N

NOTES:

c/w COMPLETE WITH
FDN FOUNDATION
e/w EACH WAY
EX. EXISTING
H HIGH/HORIZONTAL
max. MAXIMUM
min. MINIMUM
OBC ONTARIO BUILDING CODE
o/c ON CENTER
P.T. PRESSURE TREATED
r/w REINFORCED WITH
t/o TOP OF
TYP. TYPICAL
V VERTICAL
W WIDE
WWW WELDED WIRE MESH

No.	REVISION DESCRIPTION	MM/DD/YY	CH'KD
1.	PRELIMINARY FOR DISCUSSION ONLY	05/07/25	TR
2.	REVISED FOR OWNER REVIEW	06/20/25	TR
3.	SITE PLAN - MINOR VARIANCE APPLICATION	07/10/25	TR
4.	ISSUED FOR APPROVAL	07/21/25	TR
5.	REVISED SITE PLAN	08/22/25	TR

CONTRACTOR

08/22/25
T. J. REGIER
100550036

CONSULTANT

ENGINEERING AND DESIGN LTD.
CIVIL•COMMERCIAL•AGRICULTURAL

145 Thames Road, West, Unit 4
Exeter, ON, N0M 1S3
Telephone: (519)-317-0128
Email: admin@mrengdesign.com

BRENAIR FARMS INC.
LAYER BARN

7189 PARKHOUSE DRIVE
MELBOURNE, ON
N0L 1T0

SITE LOCATION PLAN - MDS SKETCH

PROJECT No. *MR25-027*

SHEET No. SP

SCALE As indicated

DESIGN	**TR**
DRAWN	**TR**
CHECKED	**TR**
APPROVED	**TR**
DATE	**AUGUST 2025**